WORK ZONE CONTINUOUS CURBING AND CHANNELIZING SYSTEM

QUICK KURB®
CHANNELIZING SYSTEMS

Choose from multiple marker configurations.
From our standard L84 work zone flat panel to our most visible L104; all QWICK KURB Panels and Bollards are suitable for temporary applications.

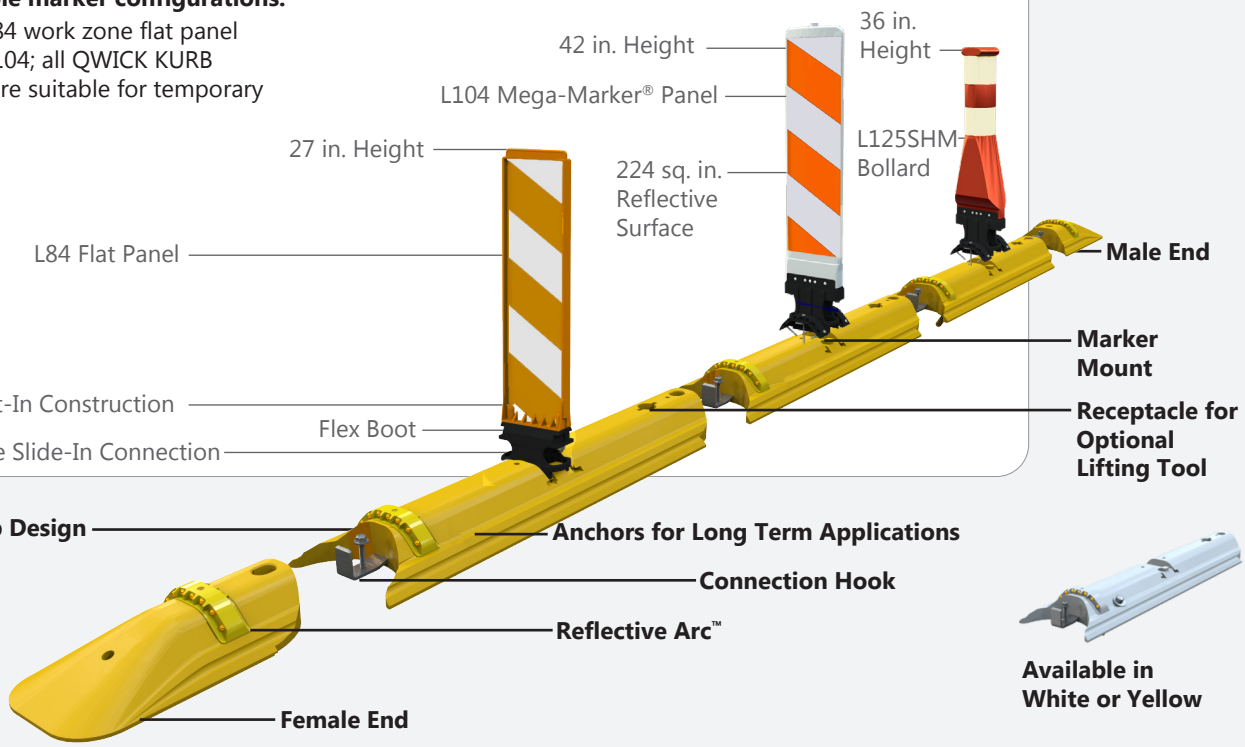

Available in White or Yellow

Because the QWICK KURB System connects laterally as portable concrete barrier does, the system can be installed anchored, semi-anchored, or anchor-free.

L104 MEGA-MARKER®

QWICK KURB® Panel Markers can accept up to 224 square inches of reflective sheeting per side to achieve the highest level of night visibility. The Panel Marker connects to the curb base using the unique QWICK KURB two-part vertical rebounding flex boot support. This allows for installation of extra-tall 42 in. markers that can spring back to an upright position after impact.

L125SHM BIG BOLLARD™

The QWICK KURB Big Bollard Marker is the largest reboundable bollard on the market with a 15" circumference. It addresses the need for high target multi-direction markers. In addition, the unique two-part vertical, with rebounding boot support, allows markers to remain upright in the most demanding environments.

CONTINUOUS CURBING

QWICK KURB Continuous Curbing is designed to interlock together similar to concrete barrier wall. A heavy duty hook is molded directly into the element to strengthen the system laterally. Anchors can also be added for long-term installations. The two-tier profile is designed to help keep curbing stationary during run overs. In addition, continuous curbing is only 10 5/8" wide so it easily fits within double yellow lines.

THE CHANNELIZER DESIGNED FOR THE DEMANDS OF THE WORK ZONE

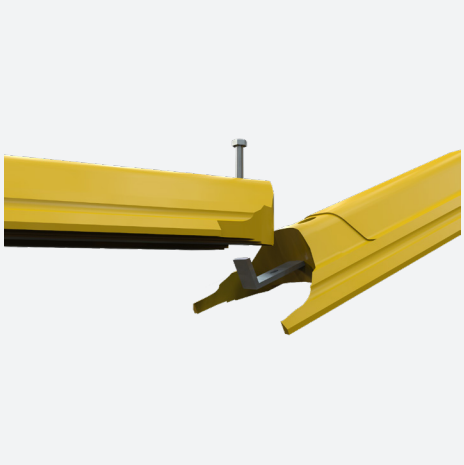

Interlocking Continuous Curb

Just like anchoring barrier wall, a secure connection between curbs is essential. Molding a heavy duty hook into the Continuous Longitudinal Channelizer strengthens the connection.

Anchor-Free Deployment

The combination of a smart two-tier design that can exert downward pressure during a run over and a lateral connection similar to portable concrete barrier, allows the QWICK KURB System to be installed anchored, semi-anchored or in certain circumstances, anchor-free.

3.5 Inches High, No Vaulting

The unique two tier design of the QWICK KURB System allows the channelizing curb to be as tall as possible without vehicle vaulting.

On the bottom of each curb are molded rubber feet to raise the curb above the road surface to facilitate water run-off.

Reboundable Boot

QWICK KURB Markers connect to the curb base using the unique QWICK KURB two-part vertical rebounding flex boot support. This allows for installation of extra-tall 42 inch markers that can spring back to an upright position after an impact.

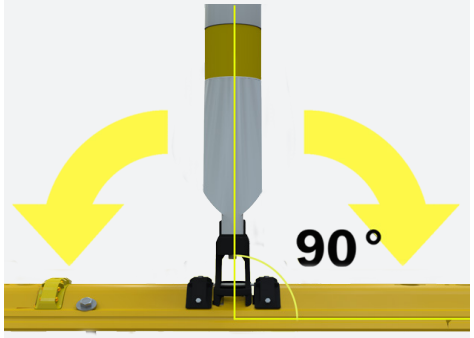

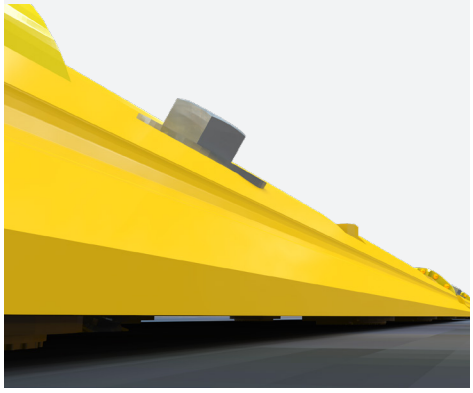

No pad required – Just place the QWICK KURB System on the roadway surface for short term operations.

For long term operations, anchors an be easily installed to secure the system to asphalt, concrete and even grated bridge decks.

QWICK KURB®

CHANNELIZING SYSTEMS

The QWICK KURB® Continuous Curbing System is ideal for harsh environments such as work zones and narrow medians. Wide formidable delineators on top of a raised continuous curb clearly define the intended travel path and increase motorist compliance while providing superior channelization in all weather conditions, even snow. The QWICK KURB Continuous Curbing System meets eligibility requirements based on AASHTO MASH or NCHRP 350 criteria as a TL-3 Longitudinal Channelizer. The system can be installed fully anchored, semi-anchored or, in some work zone applications, unanchored.

QWICK KURB®, INC.
1916 US 41 South • Ruskin, FL 33570 • (813) 645-5072
www.qwickkurb.com

General details for QWICK KURB Systems are subject to change without notice to reflect improvements and upgrades. Always refer to the installation manual for details and cautions. Additional information is available from QWICK KURB®, INC.

© QWICK KURB®, INC.

U.S. Distributor and License for horizont klemmfix