Valtir, LLC

L54 Long Base Installation Manual©

15601 Dallas Parkway, Suite 525, Addison, Texas 75001

Phone: 813-645-5072 www.qwickkurb.com

Version 2.2 October 15, 2026

TOOLS AND EQUIPMENT CHECKLIST

For a typical installation, we recommend the items listed below.

NOTE: Always follow manufacturers' instructions when using any power, impact or other tools and equipment.

Item	Description
5 Horsepower Generator	5,000 watts.
Variable Speed Rotary Hammer	300-700 no load rpm and 1,650-3900 rpm; 1" bit capacity, e.g., Bosch Terminator Model 11222EVSG or Milwaukee Hawk ® Model 5362-1. Drills holes into asphalt or concrete for anchors.
Carbide Tipped Bits for Rotary Hammer	ANSI diameter 3/4"; minimum usable length 10". The quantity needed depends on the length and number of installations and the density of the underlying material.
Electric Impact Wrench	1/2"; maximum torque 330 ft. lbs., e.g., Ingersoll-Rand Model IR8053 or DeWalt Model DW290
15/16" Shallow Socket	Use with electric impact wrench to tighten FS50 anchor sets (for asphalt or flexible road base).
1 1/8" Shallow Socket	Use with electric impact wrench to tighten FS51 anchor sets (for concrete surfaces).
Electric Drill	1/2"; 0 to 550 rpm, variable speed e.g., Makita Model 6402 and a 7/16" Six Point Socket - installs S65 black Securing Arcs (use the low setting torque avoid stripping the screw heads).
Extension Cord	50 foot heavy duty grade 12 gauge.
Rubber Hammer	Assists in tapping the markers/bollards and L65 Reflective Arcs into place.
Hammer	Taps anchors into the drilled holes.
Soapy Water	Assists in sliding the markers/bollards into place.
Stiff Broom	Clears debris from the intended placement location for the L54 LONG BASE.

To install a large number of markers/bollards you may wish to purchase our Q640 Panel Puller. Refer to **Appendix A Page 13** for more information.

PARTS CHECKLIST

Refer to the **Illustrated Parts** section for a close up view of the parts listed below.

Part Number	Description	Quantity
L54	QUICK KURB® LONG BASE Unit	The number ordered.
L65	Reflective Arc	The number ordered (Optional)
S65	Black Securing Arc	(2) per marker/bollard - Secures each marker/bollard's reboundable Flex Boot.
L84	Short Delineator	The number ordered.
L104	Reboundable Mega Marker®	The number ordered.
L125	Reboundable Big Bollard®	The number ordered.
L125sh	Reboundable Short Big Bollard®	The number ordered.
FS50	Asphalt 5/8"x 3 1/2" Cloverleaf Mollies, 5/8"x 6" Lag Bolts, and 5/8" Washers	The number ordered – (2) per L54 LONG BASE.
N/A	2 1/2" Hex Screws	(2) For each black Securing Arc.
N/A	4" Hex Screws	(1) For each black Securing Arc.

ILLUSTRATED PARTS

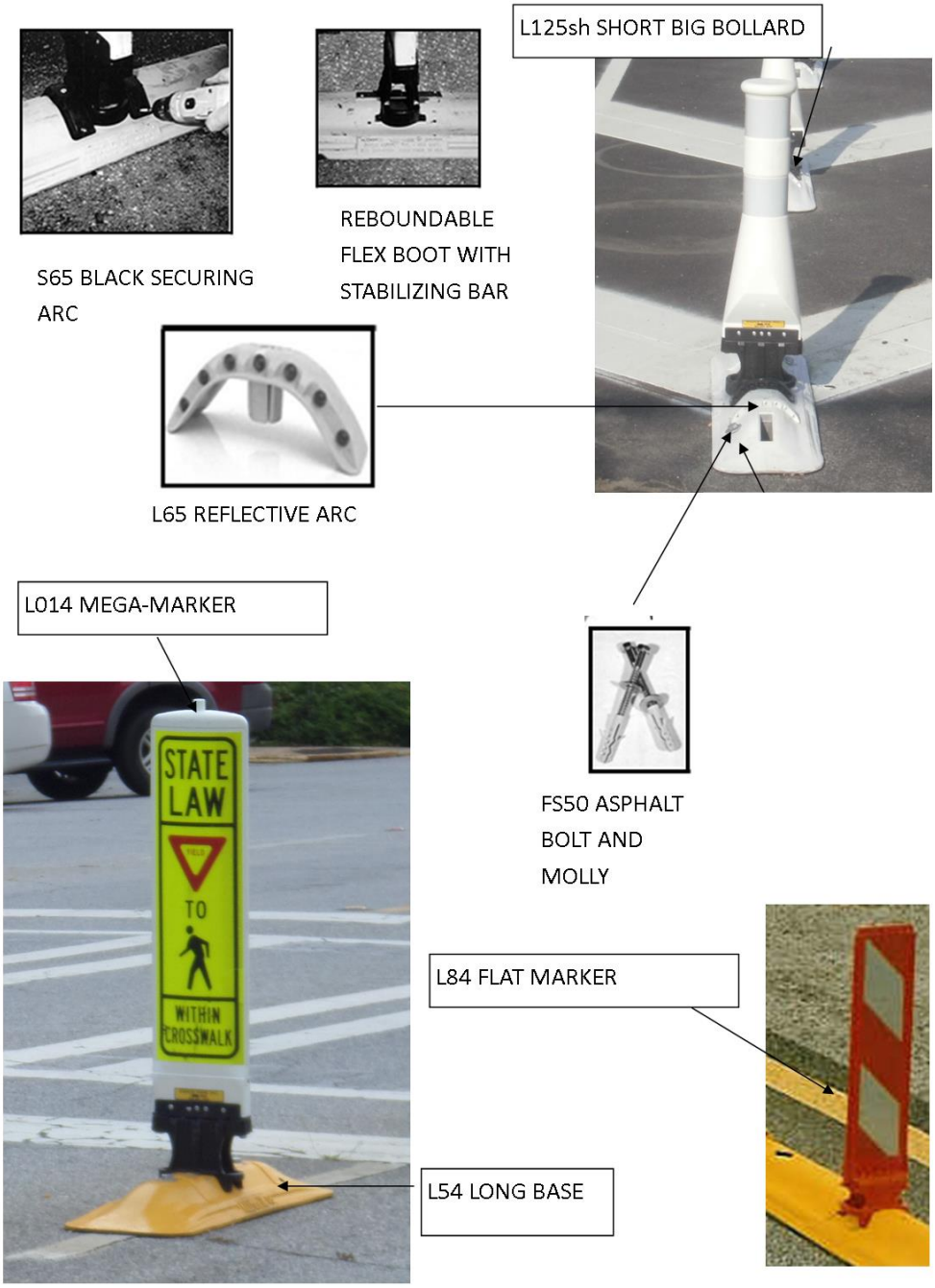

PREPARING THE ROADWAY FOR INSTALLATION

CLEANING THE ROADWAY SURFACE

QWICK KURB® is designed for mounting on generally flat asphalt and concrete surfaces. A long-term installation of the L54 LONG BASE on gravel, dirt roads, or other loose surfaces may not be effective. Usually, a stiff broom is adequate to prepare an area free from gravel, cinders, sand, and other debris.

The L54 LONG BASE should not be installed on top of reflective pavement markers (RPMs). Preferably, arrange the alignment of the L54 LONG BASE to the side of any RPMs in the installation area, or remove the RPMs if appropriate for the conditions. Remove any surface mount delineator that is in the L54 LONG BASE'S intended position. If the surface is highly irregular, e.g., cobblestones, potholes, etc., or of unstable material which may break or separate if drilled, such as paving bricks, etc., an alternative to the L54 LONG BASE in that position may be necessary.

INSTALLING THE L65 REFLECTIVE ARCS

The L65 Reflective Arcs (Optional Component) may be added before or after bolting the L54 LONG BASE units to the roadway.

To add the L65 Reflective Arcs:

1. Insert one or two Reflective Arc's post into the holes (Fig 1) on each L54 LONG BASE units and tap it into place gently with a rubber hammer (if you hammer too hard you may pop out a cats eye).

Fig 1

INSTALLING TO THE ROADWAY

FINE TUNING

After the L54 LONG BASE unit is in position and before drilling is complete, inspect for correct alignment.

BOLTING TO THE ROADWAY – ASPHALT OR CONCRETE

To bolt to the roadway:

Each L54 LONG BASE unit has two holes located on opposing sides that are angled toward the center of the L54 LONG BASE. Each hole is sized to accommodate the plastic expansion anchor.

1. Drill holes to a minimum depth of 8".

TIP: Place a mark on the drill bit 8" from the tip.

2. Using the rotary hammer with the 3/4" bit, insert the bit through the angled hole, and drill into the asphalt road. Do not drill straight down, but rather follow the same angle of the pre-drilled hole in the L54 LONG BASE. When the marked point on the bit is flush with the L54 LONG BASE, a depth adequate to accommodate the bolt and anchor, stop drilling.

TIP: If you have two drills, installers can drill in accord on opposing sides of the L54 LONG BASE.

3. Place a washer on a lag screw, and insert the lag screw into the plastic expansion anchor.

NOTE: This anchor assembly may be built prior to mobilizing on the job site.

4. Use the *small* hammer to tap the bolt through the hole until it pushes the plastic expansion anchor through, and bottoms out under the pavement.

5. Use the impact wrench with a 15/16" socket to tighten the bolt until the washer is *snug* against the L54 LONG BASE unit and the plastic expansion anchor widens beneath the road surface.

*CAUTION: **NEVER** install a bolt without the washer and anchor.*

HINT: Temperature extremes can cause the L54 LONG BASE to contract and expand slightly even during the short installation time. Therefore, if you drill all of the holes of many L54 LONG BASES at one time, you may discover that some of the holes in the L54 LONG BASES no longer align with the holes you have drilled into the pavement. Ideally, a second installer installs the anchor bolt shortly after the first installer drills the hole.

Occasionally, such as on bridge decks and in tunnels, there are depth restrictions for anchor penetration. For 3" maximum depth penetration, use a 5" long lag bolt. Place a mark on the drill bit 5-¼" from the tip, and proceed as indicated above. When measured vertically, the hole will be no more than 3" in depth. For more stringent depth restrictions, contact Valtir, LLC Customer Service.

INSTALLING THE MARKERS/BOLLARDS

The marker/bollard is best added after the L54 LONG BASE is bolted into position on the roadway. The reboundable Flex Boot of the marker/bollard has a narrow edge and a tall edge. The narrow edge of the reboundable Flex Boot of the vertical marker/bollard fits into the center slot of the L54 LONG BASE. Notice that there is a small wedge in the slot (Fig 2). It is easier to insert the reboundable Flex Boot in the side where the wedge is located, but inserting from either side is effective.

NOTE: The L84 Flat Marker does not have a stabilizing bar.

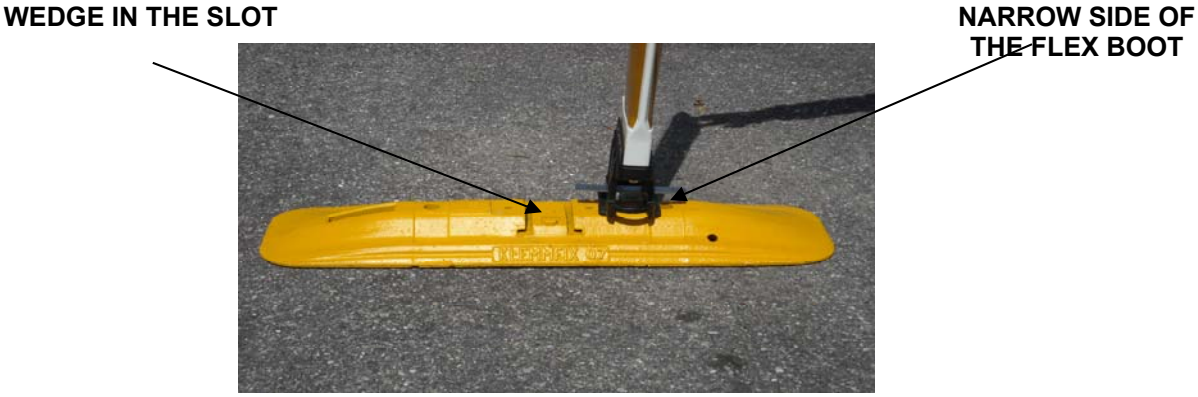

Fig. 2

Use soapy water to lubricate the bottom of the marker/bollard and the slide-in slots in the center of the one-meter L54 LONG BASE. Do not use silicone or petroleum-based lubricants because residue may allow the markers/bollards to ease up from the L54 LONG BASE and cause them to lean.

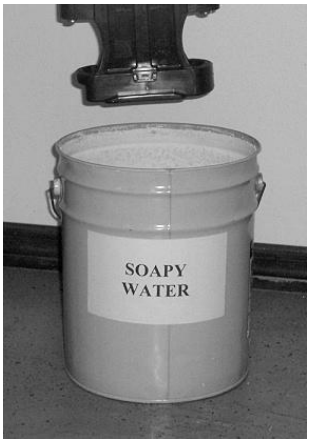

Fig 3

Position the reboundable Flex Boot into the L54 LONG BASE slot with the narrow edge facing toward the L54 LONG BASE. Give it a gentle tap so that the marker/bollard stands on its own (Fig 3).

Continue to tap the base with a rubber hammer, while pulling, to help the marker/bollard slide into the slot. The reboundable Flex Boot has two sloping ends to assist sliding it into the L54 LONG BASE (Fig 4).

Fig. 4

HELPFUL HINT: If the Flex Boot resists sliding into the slot, insert a pry bar between the road and the L54 Long Base beneath the slot and raise slightly while taping the Flex Boot. Raising the L54 Long Base at the slot will spread open the slot slightly to allow easier insertion of the Flex.

The Stabilizing Bars (metal flanges) protruding from the sides of the reboundable Flex Boots are designed to rest tightly on top of the L54 LONG BASE. Accordingly, do not be concerned if the Stabilizing Bars scrape the top of the L54 LONG BASE during installation.

ALTERNATE METHOD: THE Q640 PANEL PULLER TOOL

For easiest installation, we recommend using the Q640 Panel Puller tool. Marker/bollard installation is faster and easier. Refer to **Appendix A** for a description and instructions.

SECURING THE MARKER/BOLLARD WITH THE S65 BLACK SECURING ARCS

There are two S65 black Securing Arcs for the Flex Boot of each marker/bollard. Each S65 black Securing Arc has two short hex head screws and one long hex head screw.

NOTE: This section does not apply to the L84 Flat Marker/Bollard. The L84 Flat Marker/Bollard does not require S65 black Securing Arcs.

IMPORTANT: You must install all 3 screws in each S65 black Securing Arc. Start with the longer 4" screw that installs in the top hole of the S65 black Securing Arc. If you use the short screws first, the Securing Arc will not be tight enough on top.

The S65 black Securing Arcs serve two purposes: Discourages theft and strengthens the reboundable Flex Boot connection.

Securing the Stabilizing Bars that protrude from the reboundable Flex Boot reduces the chance of the reboundable Flex Boot popping out of the L54 LONG BASE'S slot upon a severe vehicular impact on the marker/bollard.

To secure the markers/bollards:

1. Position the Stabilizing Bars so that their holes are above the pre-molded holes in the top of the L54 LONG BASE. (Fig 5). If necessary, use the rubber hammer to align the Stabilizing Bars with the pre molded holes.

Fig. 5

2. Place a black Securing Arc on the L54 LONG BASE, snugly against one side of the marker/bollard's reboundable Flex Boot, aligning the hole with the hole in the Stabilizing Bar and the hole in the L54 LONG BASE.

3. Place the long screw through the single top hole of the S65 black Securing Arc, and tighten securely.

IMPORTANT: The 4" screw must be installed first. For all screws use a 7/16" Six Point Socket to avoid stripping the screw heads. If using an electric drill, DO NOT EXCEED 800 RPM.

4. Place two short screws into the two side holes of the S65 black Securing Arc, and tighten securely.

5. Repeat the process with a second black Securing Arc on the other side of the reboundable Flex Boot (Fig 6). Continue the process of installing two S65 black Securing Arcs for each marker/bollard's reboundable Flex Boot.

The Black Securing Arc Requires All 3 Screws

Top long screw installs FIRST.

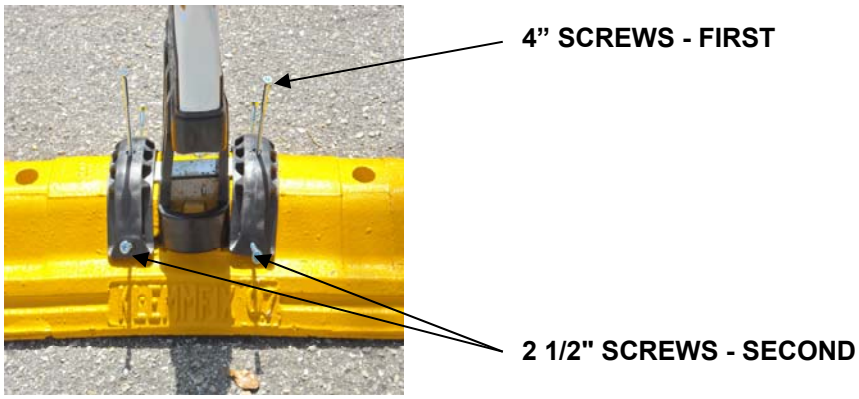

Fig. 6

REMOVAL

Unlike asphalt or concrete curb, QWICK KURB® is *reusable*. It can be removed to make way for repaving, and then reinstalled inexpensively. Only the plastic expansion mollies and concrete anchor assemblies must be abandoned and replaced.

REMOVING THE MARKERS/BOLLARDS

1. Unscrew the S65 black Securing Arcs. Save the hardware and the S65 black Securing Arcs. Slide the markers/bollards out of the L54 LONG BASE. Use a rubber hammer to tap the marker/bollard's reboundable Flex Boot.

NOTE: If you have adequate storage space, you may skip this step and leave the markers/bollards in the L54 LONG BASE.

REMOVING THE L65 REFLECTIVE ARCS

We recommend leaving the L65 Reflective Arcs attached for storage.

UNBOLTING FROM THE ROADWAY

1. Use the impact wrench with the 15/16" socket to back out each of the asphalt lag bolts. Save the undamaged bolts and washers for the next installation.

APPENDIX - A Q640 PANEL PULLER INSTRUCTIONS

QWICK INSTALLATION

The reboundable Flex Boot of the marker/bollard has a narrow edge and a tall edge. The narrow edge of the reboundable Flex Boot of the vertical marker/bollard fits into the center slot of the L54 Long Base. Notice that there is a small wedge in the slot (Fig 1). It is easier to draw the reboundable Flex Boot from the opposite side of where this wedge is located, but drawing from either side is effective. Your Panel Puller will grip the horizontal band of the short edge.

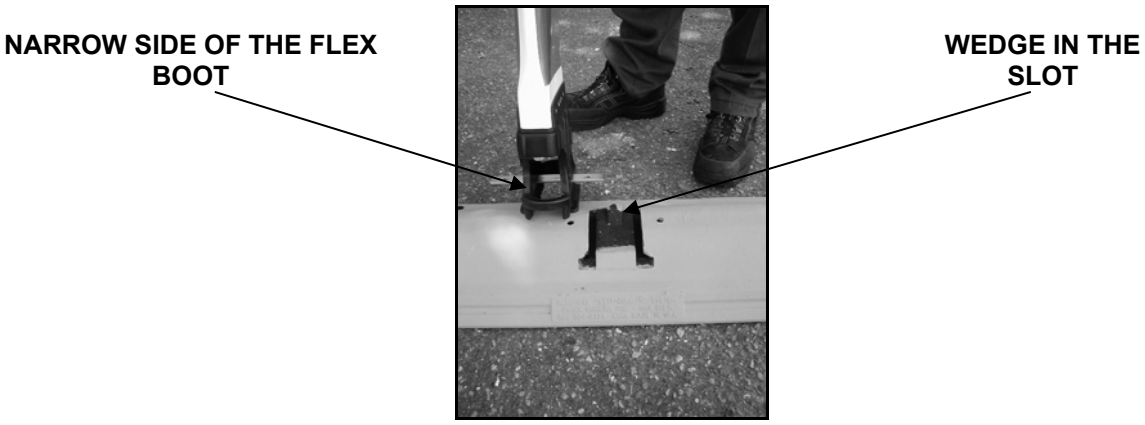

Fig 1

To use the Q640 Panel Puller:

TIP: Dip the reboundable Flex Boot into soapy water to start. (See page 8.)

1. Position the reboundable Flex Boot into the L54 Long Base slot with the narrow edge facing toward the L54 Long Base. Align the reboundable Flex Boot into the slot, and start it with a gentle kick or hammer tap so that the marker/bollard stands on its own.

2. Tilt the Panel Puller toward the reboundable Flex Boot and use the steel hook to grab the horizontal edge of the boot. If the metal flanges of the Stabilizing Bar scrape the top of the L54 Long Base, you may have to tap them with a hammer while pulling. Position the holes of the metal flanges to align with the small holes in the top of the L54 Long Base.

Fig 2

3. Bring the base plate of Panel Puller toward yourself so that it sets flat on the roadway surface, flush against the L54 Long Base.

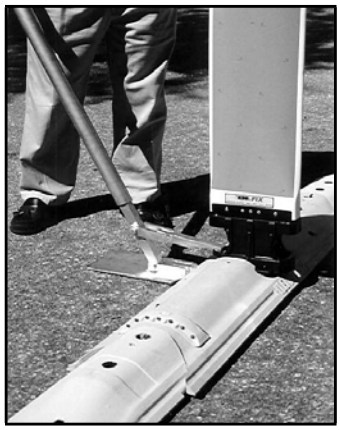

Fig 3

4. Use the long Panel Puller handle to pull the reboundable Flex Boot through the L54 Long Base. If the reboundable Flex Boot misaligns as it moves through the L54 Long Base, maneuver the Panel Puller to the left or right to make adjustments (Fig 8). Remember the soapy water if you have difficulty.

Fig 4

APPENDIX - B Installing New Markers/Bollards to the reboundable Flex Boot

TRAFFIC CONSIDERATIONS

Whenever possible close both adjoining lanes to traffic when replacing markers/bollards on the road. If one lane must be kept open, take care to assure that all equipment and personnel are kept clear of the open travel lane. Observe all traffic control regulations. Use flaggers, law enforcement officers, flashing arrow boards, attenuators and other safety devices as necessary for the conditions present.

REMOVING THE OLD MARKER/BOLLARD TOP FROM THE REBOUNDABLE FLEX BOOT

1. With the old marker/bollard top and reboundable Flex Boot still attached to the L60 SEPARATOR, step on the side of the old marker/bollard to bend it down to the pavement so that you can access the bottom of reboundable Flex Boot.

2. Remove the nuts and washers that attach the old marker/bollard top to the reboundable Flex Boot.

3. Pull up on the old marker/bollard top to detach it from the reboundable Flex Boot

PREPARING THE NEW MARKER/BOLLARD FOR INSTALLATION ON THE REBOUNDABLE FLEX BOOT

1. Remove nuts and washers from the new marker/bollard top.

CAUTION: Be careful that bolts do not slip up into marker/bollard or they will be lost. Keep the bolts pointed down at all times, but do not rest the bolts on a hard surface.

---

2. Pull firmly on the bolt to assure that proper amount of threads are visible. Twist the bolt head if necessary to properly seat it in its plastic holder.

2. Apply a lubricant such as soapy water to the plastic teeth so that they can pass through the slot in the top-center of the reboundable Flex Boot.

3. Install the bolts of the new marker / bollard top into the holes on the Reboundable Flex Boot, being careful not to allow the bolts to slide up into the marker / bollard where they would be lost. At this point, the teeth, even

with lubrication, will probably not go into the reboundable Flex Boot. Thus, the bolts will not protrude fully through the holes at this state.

5. Tilt the new marker/bollard top edgeways so that you can force one bolt through one of the holes sufficiently enough to install the washer and thread the nut several turns.

6. Tilt the new marker/bollard top to the other side, so that you can force the other bolt through its hole, and install the washer and thread the nut several turns.

7. Tighten both nuts firmly.

8. Firmly press down on the new marker/bollard top to *pop* the teeth through the slots in the reboundable Flex Boot.

9. Bend the new fully assembled marker/bollard back and forth to test that the teeth have passed through the reboundable Flex Boot.

APPENDIX - C Parts Specifications

L54 LONG BASE UNIT

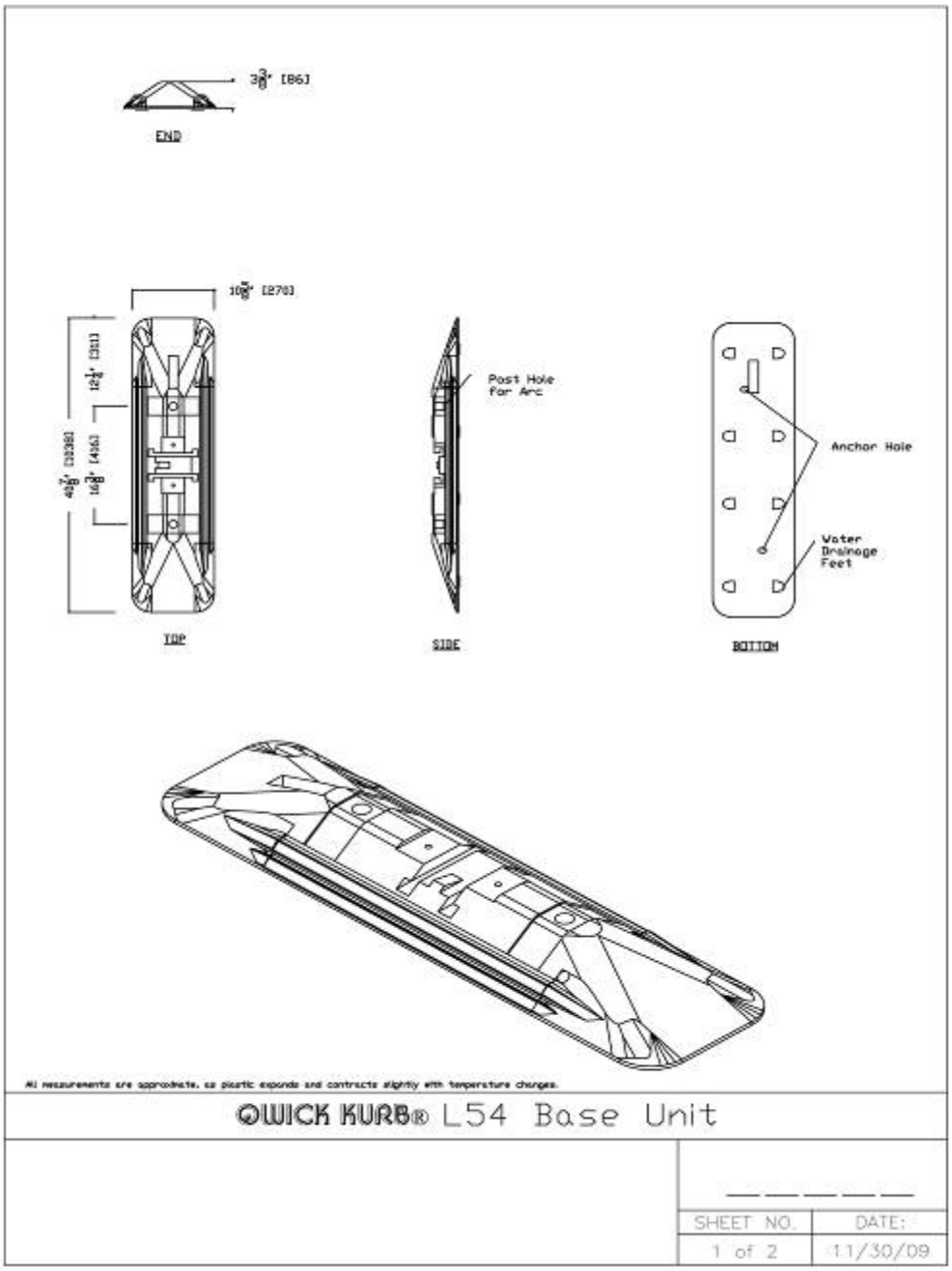

L65 REFLECTIVE ARC

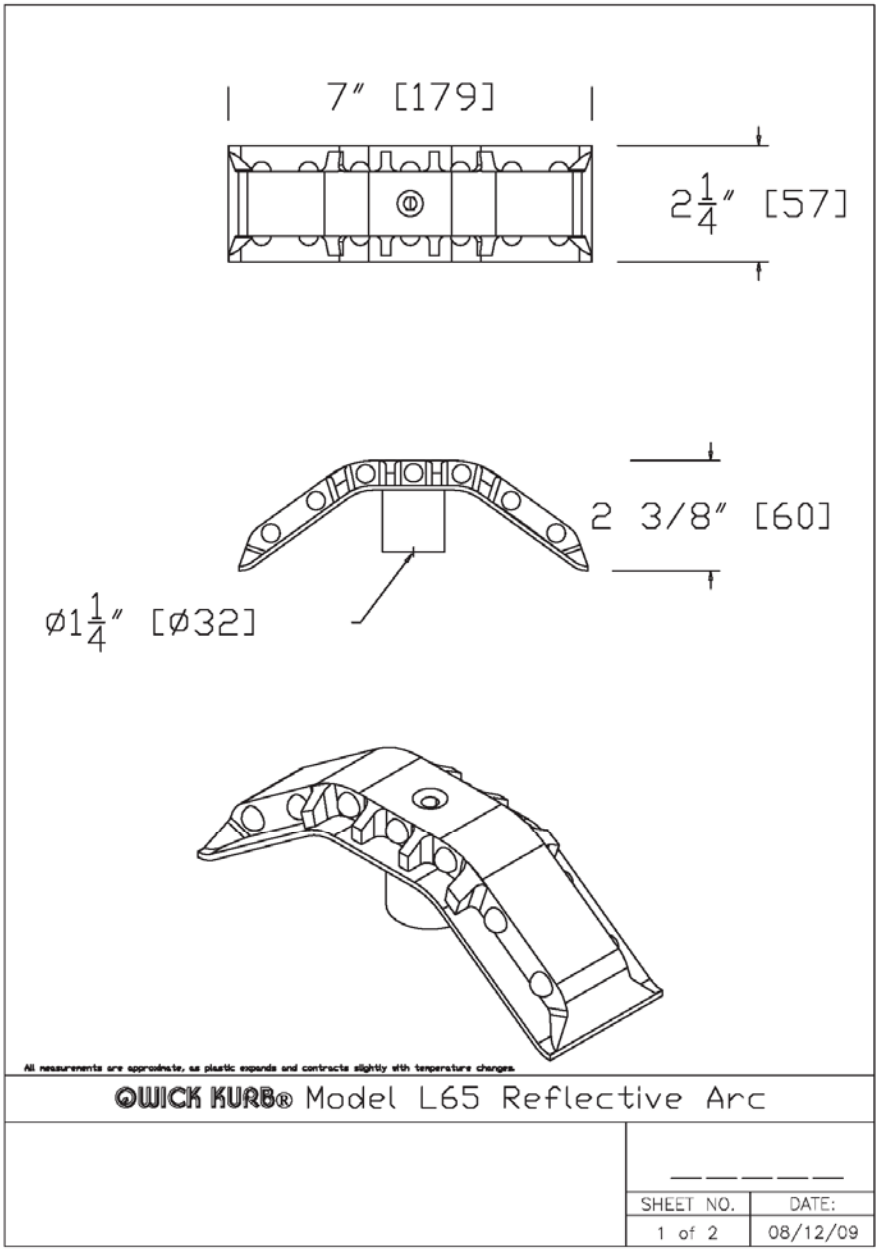

S65 SECURING ARC

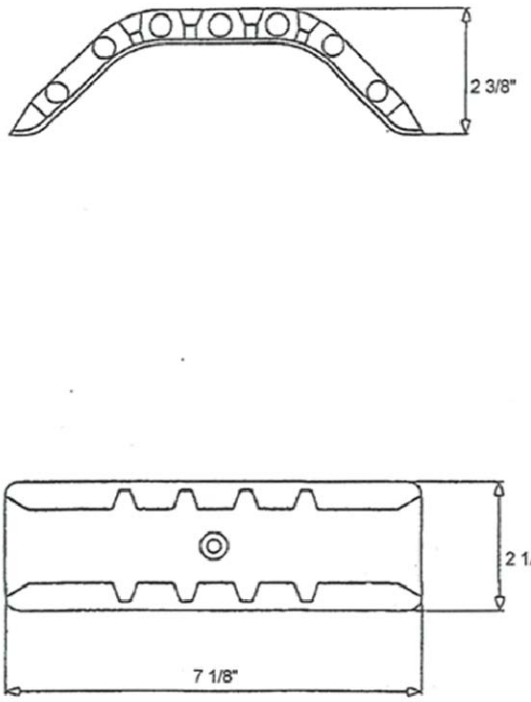

Rev.	Description	Date	Initials
0	Initial Drawing	4/2/04	MS
1			
2			
3			
4			
5			

Model Number:	S 65
Name:	Securing Arc
System:	Lane Separator
Scale	Not To Scale
Overall Dimensions:	Length: 7 1/8" Width: 2 1/2" Height: 2 3/8"
Weight:	1/3 pound
Sheeting:	none
Color: Black Materials:	Plastic

*Note: All measurements are approximate as plastic expands and contracts slightly with temperature change.

QWICK KURB®, INC.

Sheet 1 of 1

L84 FLAT MARKER

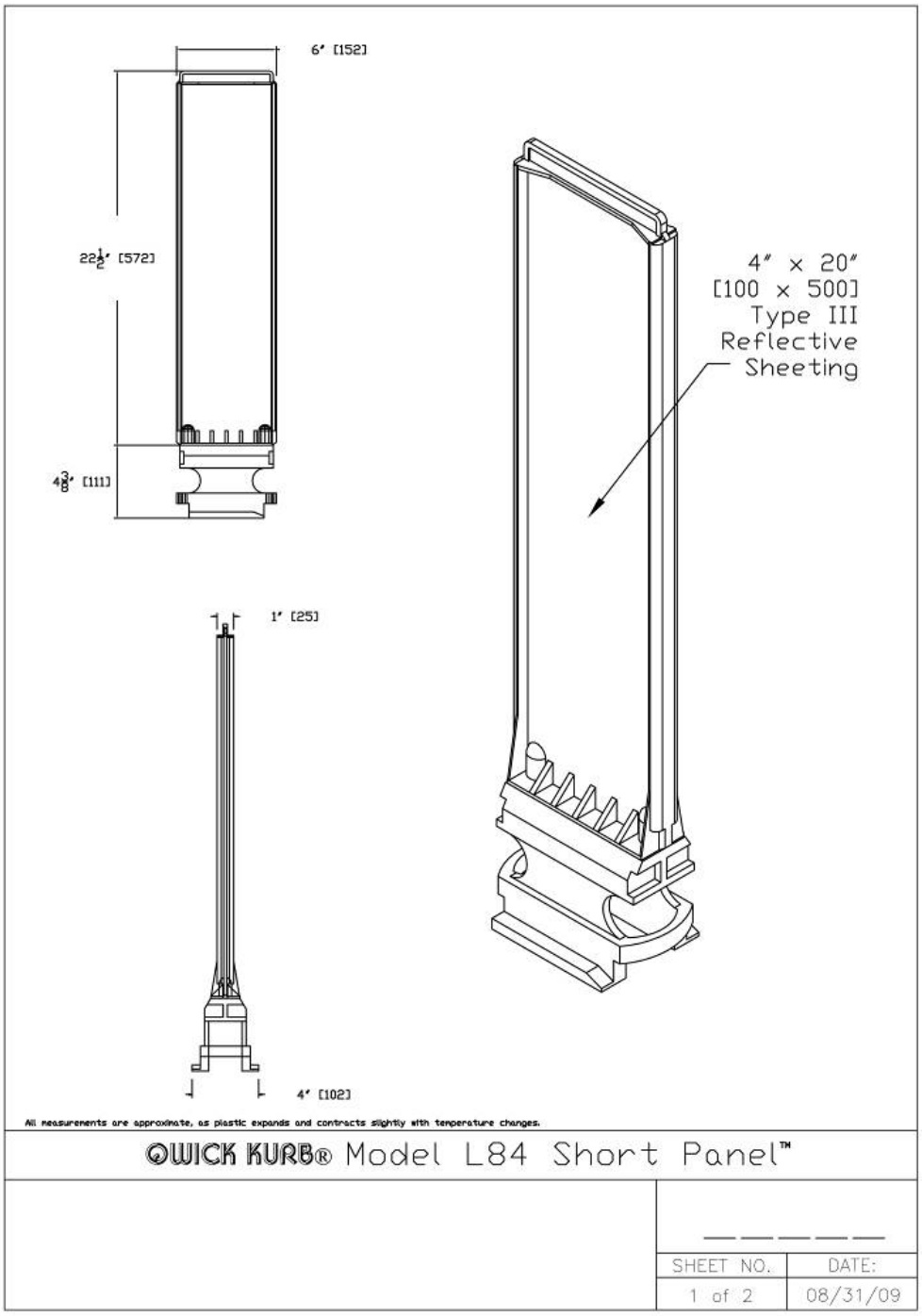

L104 MEGA MARKER®

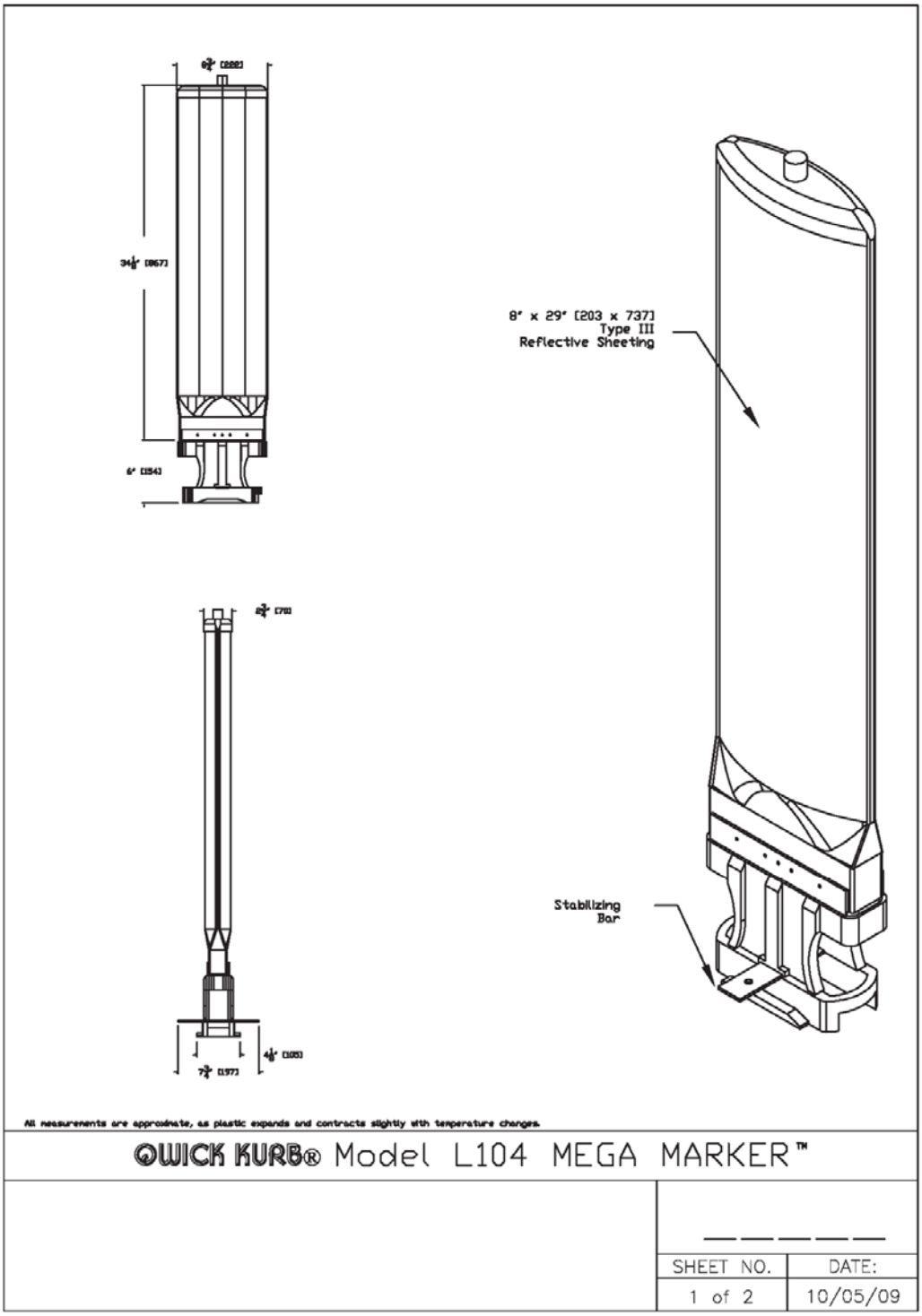

L125 BIG BOLLARD®

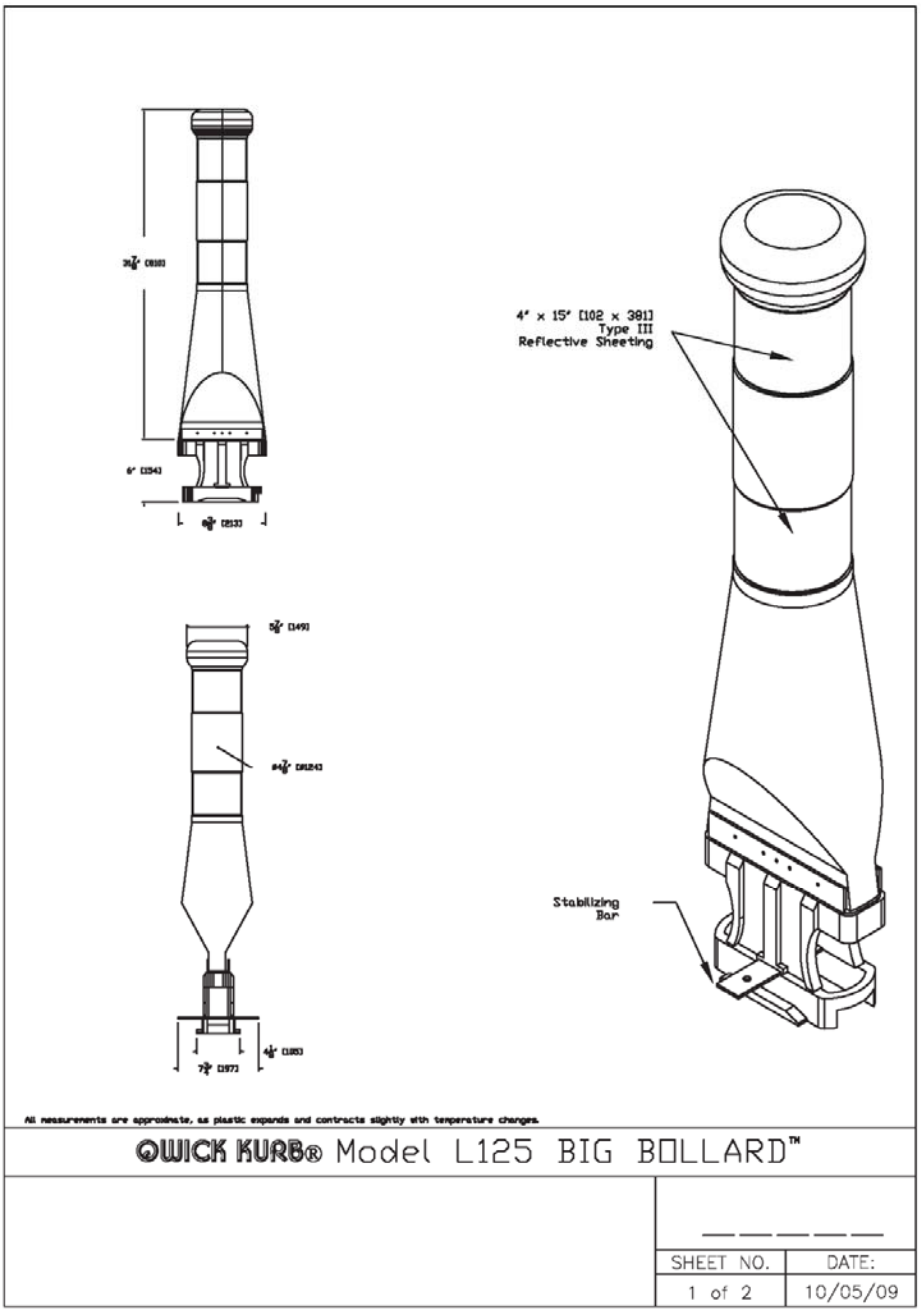

L125SH SHORT BIG BOLLARD ®

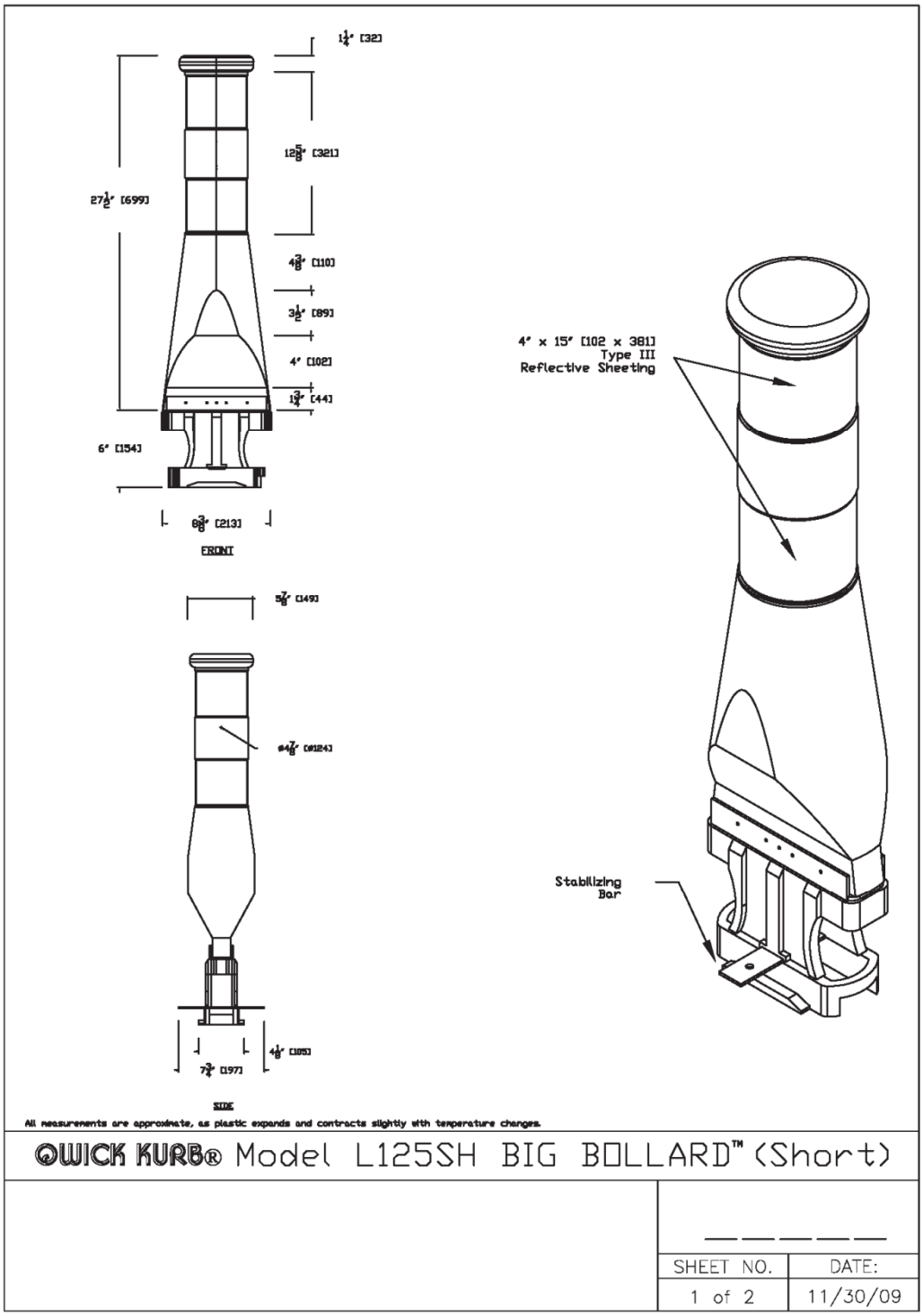

FS50 ASPHALT ANCHORING SET

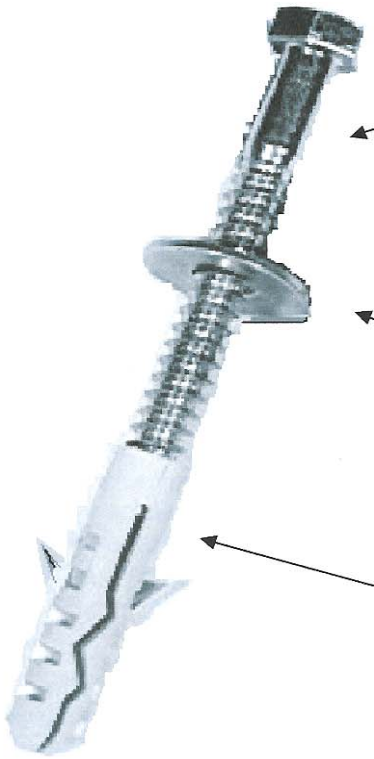

Rev.	Description	Date	Initials	Model Number:	Scale	Not To Scale	
0	Initial Drawing	9/16/02	MGS	FS 50	Overall Dimensions:		
1				Name:	Length: N/A	Width: N/A	Height: N/A
2				Anchoring Hardware for Conventional Roadbase	Weight:	3/4 pounds	
3				System:	Materials:	Zinc Plated	
4				Lane Separator	Color:	N/A	
5							Sheet

**Note: FS50 anchoring hardware should be used where the Molly expands in road base beneath asphalt.*

QUICK KURB®, INC.

1 of 1