Valtir, LLC

Temporary Installation Manual©

15601 Dallas Parkway, Suite 525, Addison, Texas 75001

Phone: 813-645-5072 www.qwickkurb.com

Revision: 2.2

October 2026

Private/Proprietary: Not for use or disclosure outside of Valtir, LLC except by written agreement

© 2026 Valtir, LLC

Table of Contents

INSTRUCTIONS FOR TEMPORARY INSTALLATION - 2014 5

INTRODUCTION 5

INSTALLATION CONDITIONS 6

TRAFFIC CONSIDERATIONS 6

RAISED FEET 6

SKID RESISTANT GRIPS 6

WEATHER CONDITIONS 6

DAILY MAINTENANCE 7

TOOLS AND EQUIPMENT CHECKLIST 8

PARTS CHECKLIST 9

ILLUSTRATED PARTS 10

PREPARING THE ROADWAY FOR INSTALLATION 12

CLEANING THE ROADWAY SURFACE 12

LINING THE INTENDED PATHWAY 12

USING WATER CHANNELS 12

SPACING THE REBOUNDABLE MARKERS/BOLLARDS 13

SETTING THE SEPARATOR UNITS INTO POSITION 14

SETTING THE L60 SEPARATOR UNITS 14

DO NOT DRAG THE L60 SEPARATOR UNITS 14

CONNECTING THE L60 SEPARATOR UNITS 17

INSTALLING THE L65 REFLECTIVE ARCS 17

INSTALLING TO THE ROADWAY 18

FINE TUNING 18

ANCHORING OPTIONS 18

BOLTING TO THE ROADWAY – ASPHALT OR CONCRETE 18

INSTALLING THE MARKERS/BOLLARDS 20

ALTERNATE PROCESS: THE Q640 PANEL PULLER TOOL 22

SECURING THE MARKER/BOLLARD WITH THE S65 BLACK SECURING ARCS 22

REMOVAL **24**
TRAFFIC CONSIDERATIONS 24
REMOVING THE MARKERS/BOLLARDS 24
REMOVING THE L65 REFLECTIVE ARCS 24
DISASSEMBLING THE L60 SEPARATOR UNITS 24
UNBOLTING FROM THE ROADWAY - ASPHALT 24
PICKING UP THE L60 SEPARATOR 24
DO NOT DRAG THE L60 SEPARATOR UNITS *25*

MAINTENANCE **26**

STORAGE **27**

TRANSPORT **28**

CUSTOMER SERVICE **28**
REPLACEMENT PARTS 28
MEASUREMENTS 28

APPENDIX A - Q640 PANEL PULLER **29**
QWICK INSTALLATION 29

APPENDIX B - INSTALLING NEW MARKERS/BOLLARDS TO THE REBOUNDABLE FLEX BOOT **31**
TRAFFIC CONSIDERATIONS 31
REMOVING THE OLD MARKER/BOLLARD FROM THE REBOUNDABLE FLEX BOOT 31
PREPARING THE NEW MARKER/BOLLARD FOR INSTALLATION ON THE REBOUNDABLE FLEX BOOT 31

APPENDIX C – PARTS SPECIFICATIONS **33**
L60 SEPARATOR UNIT 33
L61 MALE END UNIT 34
L62 FEMALE END UNIT 35
L65 REFLECTIVE MARKER 36
S65 SECURING ARC 37
L84 FLAT MARKER 38
L104 MEGA MARKER® 39
L125 MARKER/BOLLARD 40

L125SH MARKER/BOLLARD.....41

FS50 ASPHALT ANCHOR 42

APPENDIX D – SUPPLIMENTAL INFORMATION FOR GRATED STEEL BRIDGE DECK INSTALLATION 43

"J" HOOK ASSMEMBLIES.....43

INSTALLATION PROCEDURE USING "J" HOOKS 43

ADDING THE ARCS AND MARKERS/BOLLARDS 44

COUNTERWEIGHTS ON BRIDGE 44

TESTING 44

INSTRUCTIONS FOR TEMPORARY INSTALLATION

INTRODUCTION

QWICK KURB® is a longitudinal channelizer system of interlocking raised L60 SEPARATOR units, L65 Reflecting Arcs depicting the raised profile of the L60 SEPARATOR, and markers and/or bollards. QWICK KURB® is ideal for short to medium term use in place of temporary asphalt or temporary concrete separator (sometimes called separator islands as in the MUTCD) of similar dimensions. QWICK KURB® is designed to maintain good positioning without epoxies or bolting to the roadway, however affixing the end pieces and occasional one-meter separators to the road is a worthwhile option that provides additional stability. QWICK KURB® is deployed faster than asphalt or concrete, and its removal is accomplished in a fraction of the time. It provides superior guidance for the motorist day or night, and is ideal as a traffic separator and as an edge line guide. Installation is easily mastered by following the techniques on this instruction manual. Dimensions mentioned in the instructions are approximate. Refer to **Appendix C – Parts Specifications** on page 36 when more precise measurements are needed.

To install in locations where anchoring is required and restricted by **ROAD DEPTH,** contact Valtir, LLC to obtain alternate anchoring instructions.

CAUTION: The L60 SEPARATOR is not intended for use as a substitute where barrier wall or barrier curb is required. As with temporary asphalt and concrete separator, emergency and other vehicles are able to traverse the L60 SEPARATOR.

The L60 SEPARATOR is designed to help guide the motorist visually, earn driver respect for the visual channelization, assist encroaching drivers to promptly recognize that their vehicles are straying into improper locations, and to minimally deflect the vehicles. The L60 SEPARATOR is not designed to stop vehicles, or to alter their course in a significant manner.

When configuring a vee shape to channelize motorists away from attenuators, place the point of the vee no closer than thirty (30) feet from the attenuator. QWICK KURB® testing has not included closer positioning.

To minimize maintenance of the markers/bollards, designers should take into consideration lane width, along with wide load and truck turning radius requirements.

INSTALLATION CONDITIONS

TRAFFIC CONSIDERATIONS

Whenever possible close both lanes to traffic when installing the System between lanes. If one lane must be kept open during installation, take care to assure that all equipment and personnel are kept clear of the open travel lane. Observe all traffic control regulations. Use flaggers, law enforcement officers, flashing arrow boards, attenuators, and other safety devices as necessary for the conditions present.

RAISED FEET

On the bottom of each L60 SEPARATOR, each L61 Male and L62 Female End unit, are eight raised feet.

These are molded into the L60 SEPARATOR. The feet raise the L60 SEPARATOR slightly above the pavement surface so that water can run underneath, though water channels may be necessary if excessive water is likely. Refer to the **Using Water Channels** section on page 13 for more information.

NOTE: There are holes next to each foot that are utilized for different feet when the curb is used in an unanchored, temporary situation. These holes are not filled in when the curb is anchored to the roadway.

SKID RESISTANT GRIPS

On the bottom of each L60 SEPARATOR unit and each end piece you will see several rubber grips about the diameter of a half-dollar coin. These are fastened to the L60 SEPARATOR UNIT with a screw and washer. Be certain that each grip is in place, and that each is in good condition as these grips are an integral part of QWICK KURB®'s stability system. Before installing any components, attach or replace any grip which is not in position or is damaged. Failure to do so may result in the L60 SEPARATOR units shifting out of position with minimal vehicle impact. The grips also raise the L60 SEPARATOR slightly above the pavement surface so that water can flow underneath.

WEATHER CONDITIONS

The L60 SEPARATOR can be installed permanently under most weather conditions. Heat and cold do not present obstacles. However, before working with electrical equipment in wet conditions, be certain to follow the manufacturer's instructions to prevent electrical shock or other damage. Refer to the **Installing to the Roadway** section on page 19 for more information.

DAILY MAINTENANCE

Inspect the system daily to insure that alignment is correct. Slide any misaligned units back into proper position. If certain areas appear prone to shifting, consider using some anchors there. Replace any damaged pieces. Usually the rubber flex will not be damaged even if the sheeted marker is. An undamaged flex may be used again by replacing the damaged sheeted marker with a new marker. Periodically, wash or brush away accumulations of dirt. If water backs up against QWICK KURB®, and better drainage is needed, refer to Page 7 – Water Channels.

TOOLS AND EQUIPMENT CHECKLIST

For a typical installation, we recommend the items listed below.

NOTE: Always follow manufacturers' instructions when using any power, impact or other tools and equipment.

Item	Description
5 Horsepower Generator	5,000 watts.
Variable Speed Rotary Hammer	300-700 no load rpm and 1,650-3900 rpm; 1" bit capacity, e.g., Bosch Terminator Model 11222EVSG or Milwaukee Hawk Model 5362-1. Drills holes into asphalt or concrete for anchors.
Carbide Tipped Bits for Rotary Hammer	ANSI diameter 3/4"; minimum usable length 10". The quantity needed depends on the length and number of installations and the density of the underlying material.
Electric Impact Wrench	1/2"; maximum torque 330 ft. lbs., e.g., Ingersoll-Rand Model IR8053 or DeWalt Model DW290 – (connects the L60 SEPARATOR with connecting bolt & nut).
15/16" Shallow Socket	Use with electric impact wrench to tighten FS50 anchor sets (for asphalt or flexible road base).
17mm Shallow Socket	Use with electric impact wrench (for L60 SEPARATOR connecting bolt & nut).
Electric Drill	1/2"; 0 to 550 rpm, variable speed e.g., Makita Model 6402 and a 7/16" Six Point Socket - installs hex screws for S65 black Securing Arcs (use the low setting torque to avoid striping hex heads.)
Extension Cord	50 foot heavy duty grade 12 gauge.
Rubber Hammer	Assists in tapping the markers/bollards and L65 Reflective Arcs into place.
Hammer	Taps anchors into the drilled holes.
Soapy Water	Assists in sliding the markers/bollards into place.
Stiff Broom	Clears debris from the intended placement location for the L60 SEPARATOR.

For lengthy installations in excess of 1,000 feet, you may wish to rent our optional Conveyor.

To install a large number of markers/bollards you may wish to purchase our Q640 Panel Puller. Refer to **Appendix A** for more information.

PARTS CHECKLIST

Refer to the **Illustrated Parts** section on page 10 and 11 for a close up view of the parts listed below.

Part Number	Description	Quantity
L60	QWICK KURB® One-Meter SEPARATOR Units	The number purchased for the distance of each adjacent line.
L61	Male End Unit	At Least one and any additional L61 Male End units purchased to include the number of required water channels contemplated.
L62	Female End Unit	At Least one and any additional L62 Female End units purchased to include the number of required water channels contemplated.
L65	Reflective Arc	The number ordered.
S65	Black Securing Arc	(2) per marker/bollard - Secures each marker/bollard's reboundable Flex Boot.
L84	Reboundable Flat Marker/Bollard	The number ordered.
L104	Reboundable Mega Marker®/Bollard	The number ordered.
L125	Reboundable Round Marker/Big Bollard®	The number ordered.
L125SH	Reboundable Short Round Marker/Big Bollard®	The number ordered.
FS50	Asphalt 5/8"x 3 1/2" Cloverleaf Mollies, 5/8"x 6" Lag Bolts, and 5/8" Washers	The number ordered – (2) per L60 SEPARATOR, (1) per L61 Male, and (1) per L62 Female End units.
FS51	Concrete 3/4"x 5 1/2''Anchors, 1 1/8" Nuts, and 3/4" Washers	The number ordered – (2) per L60 SEPARATOR, (1) per L61 Male, and (1) per L62 Female End units.
N/A	2-1/2" Hex Screws	(2) For each black Securing Arc.
N/A	4" Hex Screws	(1) For each black Securing Arc.
N/A	Connecting 17mm Nuts and 1/2" Washers	Enough to fasten the L60 SEPARATOR units together – (1) per L60 SEPARATOR, and (1) per L61 Male End unit.

Each L60 SEPARATOR can accept a maximum of one L65 Reflective Arc, one bollard/marker and can accept two anchors.

Each L61 Male End unit can accept a maximum of one L65 Reflective Arc but no Bollard/marker. It can accept one anchor.

Each L62 Female End can accept a maximum of one L65 Reflective Arc, but the slot for the L65 is within 4" of the L65 slot on the adjacent L60. Quite often, the L65 is omitted on the L62 or the L65 from the adjacent L60 unit is moved onto the L62. Each L62 can accept one anchor.

ILLUSTRATED PARTS

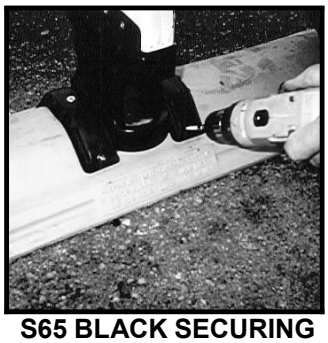

S65 BLACK SECURING ARCS

REBOUNDABLE FLEX BOOT WITH STABILIZING BAR

L62 FEMALE END UNIT

L65 REFLECTIVE ARC

FS50 ASPHALT BOLT AND MOLLY

OR

FS51 CONCRETE ANCHOR WEDGE

L60 SEPARATOR UNIT

L61 MALE END UNIT

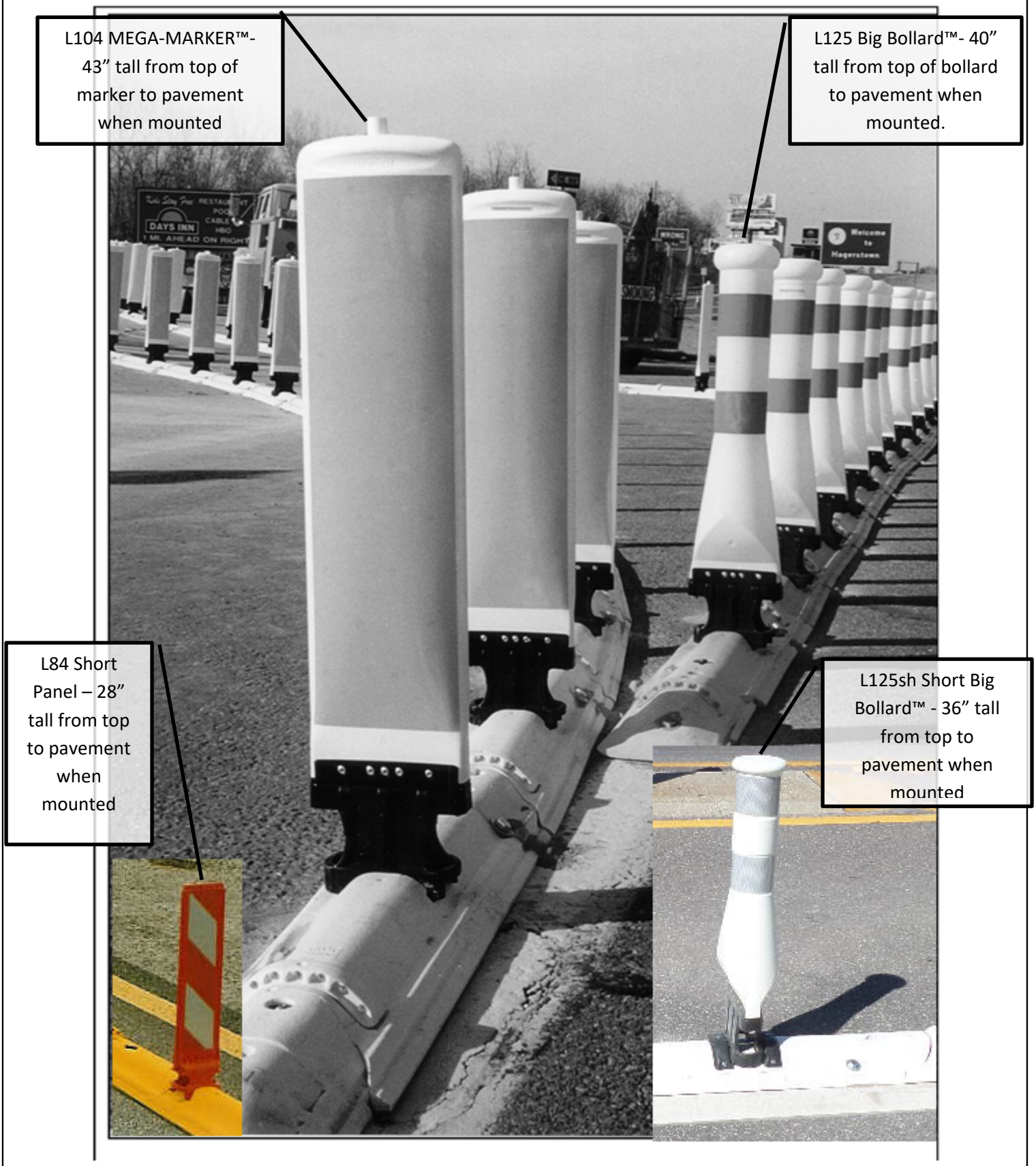
L104 MEGA-MARKER™- 43” tall from top of marker to pavement when mounted
L125 Big Bollard™- 40” tall from top of bollard to pavement when mounted.
L84 Short Panel – 28” tall from top to pavement when mounted
L125sh Short Big Bollard™ - 36” tall from top to pavement when mounted
DAYS INN
Welcome to Hagerstown

PREPARING THE ROADWAY FOR INSTALLATION

CLEANING THE ROADWAY SURFACE

QWICK KURB® is designed for mounting on generally flat asphalt and concrete surfaces. A long-term installation of the L60 SEPARATOR on gravel, dirt roads, or other loose surfaces may not be effective. Usually, a stiff broom is adequate to prepare an area free from gravel, cinders, sand, and other debris.

The L60 SEPARATOR should not be installed on top of reflective pavement markers (RPMs). Preferably, arrange the alignment of the L60 SEPARATOR to the side of any RPMs in the installation area, or remove the RPMs if appropriate for the conditions. Remove any surface mount delineator that is in the L60 SEPARATOR's intended position. If the surface is highly irregular, e.g., cobblestones, potholes, etc., or of unstable material which may break or separate if drilled, such as paving bricks, etc., an alternative to the L60 SEPARATOR in that position may be necessary.

LINING THE INTENDED PATHWAY

Use a chalk line or string to make an edge line for the L60 SEPARATOR. Often, the existing painted line is straight enough and in the right location so that no additional lining is necessary.

The L60 SEPARATOR units are 10 5/8" in width. If you are installing over an existing center lane line, for example, it is usually preferable to center the L60 SEPARATOR on the lane line so that you are evenly distributed between lanes.

USING WATER CHANNELS

Because water is able to run under the L60 SEPARATOR units, water channels are normally not needed. However, if additional water flow is desired because of unusual climate, drainage or roadway slope conditions, channels may be created by facing the downslopes of opposing L61 Male and L62 Female End units toward one another, and separating them by several inches.

If additional water channels are needed after the installation is complete, remove and replace an existing L60 SEPARATOR with an L61 Male and L62 Female End unit. This will create a water channel of approximately three inches.

NOTE: The longer the length of connected L60 SEPARATOR, the stronger the system, so use the fewest possible water channels.

SPACING THE REBOUNDABLE MARKERS/BOLLARDS

Markers/bollards are typically placed on the one-meter L60 SEPARATOR units at intervals ranging from one to seven units, that is, spaced from about 3 to 25 feet. Close spacing should be used for areas where drivers may be inclined to attempt crossing the L60 SEPARATOR, such as into popular commercial establishments.

Each L60 SEPARATOR unit can accept a maximum of one marker or bollard. This equates to a 3.35′ on center spacing of the markers. But often they are spaced further apart. Spacing of markers/bollards every other SEPARATOR unit equates to a 6.7′ on center spacing, and so on.

SETTING SEPARATOR UNITS INTO POSITION

SETTING THE L60 SEPARATOR UNITS

Verify that you have the required components to begin the L60 SEPARATOR installation process.

IMPORTANT: Before beginning, inspect all the L60 SEPARATOR components. Never use a damaged or irregular piece of any L60 SEPARATOR component.

DO NOT DRAG THE L60 SEPARATOR UNITS

Sliding the L60 SEPARATOR a few inches to correct alignment is acceptable. However, under no circumstances are the L60 SEPARATOR units ever to be dragged along a hard surface such as a road. If the L60 SEPARATOR units are inadvertently installed in an incorrect location or must otherwise be relocated, you must take up the L60 SEPARATOR units as instructed in the **Removal** section on page 25, and re-install them in the new location. Alternatively, contact Valtir, LLC operations personnel for instructions.

Two critical components of the L60 SEPARATOR that can be damaged by dragging are the steel connecting hooks and the raised feet. Dragging a long line of L60 SEPARATOR units may bend the steel connecting hooks, endangering the connections.

Dragging may also wear down the raised feet, which is unacceptable. The raised feet raise the L60 SEPARATOR slightly above the roadway surface to allow water run-off that is not handled by water channels.

To set the L60 SEPARATOR units:

1. *Always* begin installation with an L61 *Male* End unit (the End unit with the steel hook). Place it into position with the slope toward the beginning of the set-up (Fig 1). For panels with single-sided sheeting (uni-drive traffic situations) always install the L60 SEPARATOR in the direction of the traffic flow to insure that the sheeting will face the correct direction when slid into the slot on the L60 SEPARATOR.

Fig 1

Install the remaining QWICK KURB® in this direction. →

NOTE: You can add to an existing installation by removing the L62 Female End unit and continuing with L60 SEPARATORS if further extension is needed.

2. Set the female part of the one-meter L60 SEPARATOR on to the L61 Male End unit's steel hook so the bolt is exposed on the top of the one-meter L60 SEPARATOR (Fig 2). Snug them together to minimize the gap between curbs.

PUSH CURBS TOGETHER: The system is designed with a small gap between adjoining curbs to facilitate curves in the alignment. Always push the curbs closely together to tighten the gap as much as possible, whether curved or straight. This will discourage dirt and debris from filling the gap.

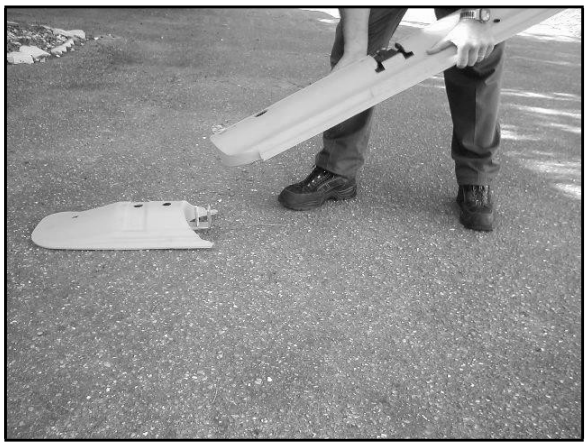

Fig 2

3. Use the steel hook on the opposite end of the one-meter L60 SEPARATOR to continue the connections.

4. Continue placing one-meter L60 SEPARATOR units in the same manner until reaching a water channel location or the end of the installation.

5. At the end of the set-up, place an L62 Female End unit (Fig 3) on to the steel hook and bolt of the last one-meter L60 SEPARATOR.

Fig 3

CAUTION: Never allow the L60 SEPARATOR to be in place without the L61 Male and Female L62 End units properly installed. An uncovered steel hook and the blunt end on the one-meter L60 SEPARATOR would be a danger to vehicles, bicycles, pedestrians, and others.

CONNECTING THE L60 SEPARATOR UNITS

To connect the L60 SEPARATOR units:

6. After the L60 SEPARATOR units have been placed into position on the roadway, Install a ½" washer over the bolt threads and hand tighten a 17mm nut to the connecting bolt.

7. Use the impact wrench with the 17 mm *shallow* socket to tighten the nut to the bolt connecting the steel hook of the adjoining L60 SEPARATOR unit.

*CAUTION: **All** bolts must be fastened in order for the system to function safely. Failure to fasten all of the units together creates the risk of separation and shifting. The installer and user assume significant liability if connecting hooks are not secured as instructed.*

INSTALLING THE L65 REFLECTIVE ARCS

The L65 Reflective Arcs may be added before or after bolting the L60 SEPARATOR units to the roadway.

To add the L65 Reflective Arcs:

8. Insert the Reflective Arc's post into the hole (Fig 4) on each one-meter L60 SEPARATOR unit and tap it into place gently with a rubber hammer (if you hammer too hard you may pop out a cats eye).

NOTE: Do not confuse the Arc holes with the Pick-up Tool holes (Fig 5).

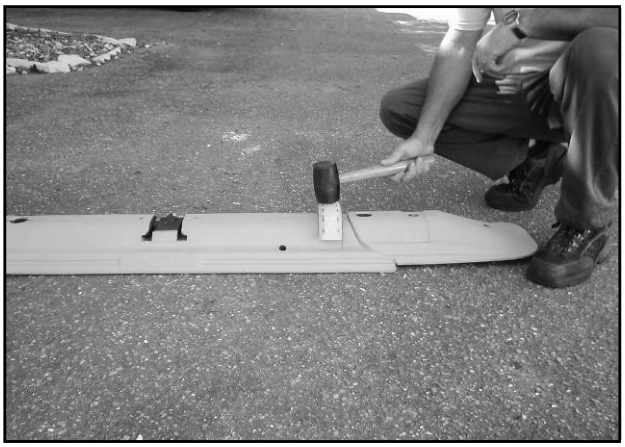

Fig 4

9. Insert a Reflective Arc into the hole on the L61 Male End unit

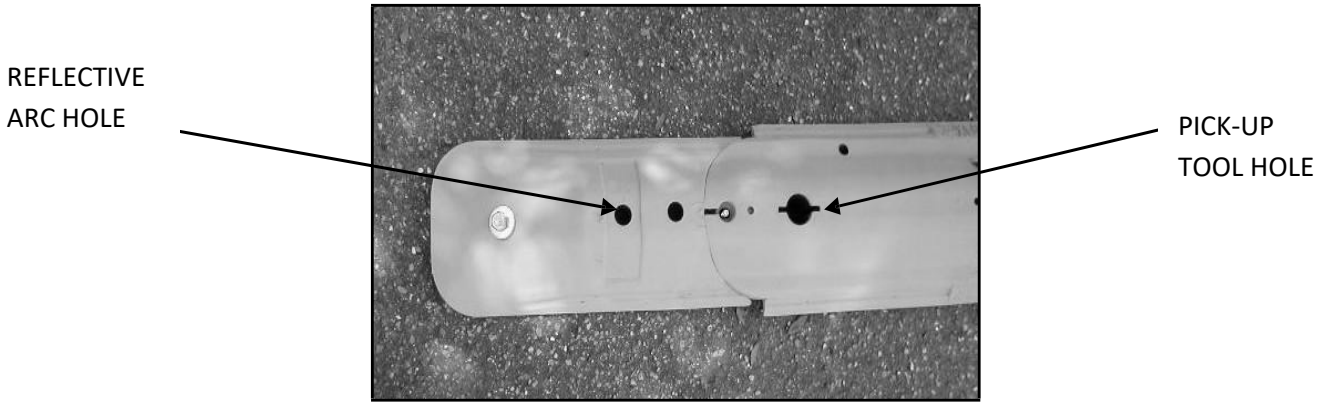

INSTALLING TO THE ROADWAY

FINE TUNING

After the L60 SEPARATOR units are in position and before any drilling is completed, inspect for correct alignment. Installers may correct minor misalignments by pulling the L60 SEPARATOR sideways.

If a conveyor is used, the easiest way to fine tune is to keep the alignment correct as the units reach the bottom of the conveyor, just prior to exiting.

ANCHORING OPTIONS

While it is not required, it may be advisable in certain situations to provide pavement anchoring for the L60, L61 and L62 units. QWICK KURB® has a unique stability characteristic and usually does not require the complete anchoring expected for permanent installations. Under most conditions, one anchor every other L60 SEPARATOR unit and (all END UNITS) is sufficient in an active work zone. In these instances of reduced anchoring, stagger the anchors to opposite sides of the L60 SEPARATORS. Monitor stability daily to be certain no shifting is occurring. For positions where heavy traffic impacts take place, consider additional anchoring. Contact Valtir, LLC to obtain additional anchors.

Since the system will only be in place for a short term (as opposed to being a permanent road fixture), it is advisable to use the FS50 anchor for both asphalt and concrete installations. In both pavement surfaces, the lag screw can be removed, and only the nylon molly will remain in the pavement.

After the lag screw is removed, a small hole will remain in the pavement. It may be advisable to plug this hole to prevent water intrusion. Using asphalt cold patch is not recommended as the aggregate in the cold patch is too large to fit in the holes. Traffic detector loop sealant or some other liquid pavement repair product would be practical. Follow local procedures or project specifications.

BOLTING TO THE ROADWAY – ASPHALT (FLEXIBLE ROAD BASE) & CONCRETE

NOTE: In certain cases there may be limitations on how deep you can drill such as on concrete bridge decks. You may have to use a shorter lag screw which will then shorten the depth of drilling. Example: For 3" maximum depth penetration, use a 5" long lag bolt. Place a mark on the drill bit 5-¼" from the tip, and proceed with the procedure below. When measured vertically, the hole will be no more than 3" in depth.

For installations on STEEL GRATED BRIDGE DECKS, see APPENDIX D.

To bolt to the roadway:

Each L60 SEPARATOR unit has two holes located on opposing sides that are angled toward the center of the L60 SEPARATOR. Each L61 MALE and L62 FEMALE END unit has one hole angled parallel to the length of the L60 SEPARATOR units. Each hole is sized to accommodate the plastic expansion anchor.

For short term installations, anchor each of the L61 Male and L62 Female ends since they are on the approach ends of the separator. Intermittently spot anchor L60 SEPARATOR units to the pavement. Since the individual SEPARATOR and END units interconnect into one another, they structurally become one large section. These structural interconnections will allow the anchors to be spaced at greater intervals.

A suggested anchoring layout is shown below using one anchor in an alternating side to side pattern on each L60 SEPARATOR unit:

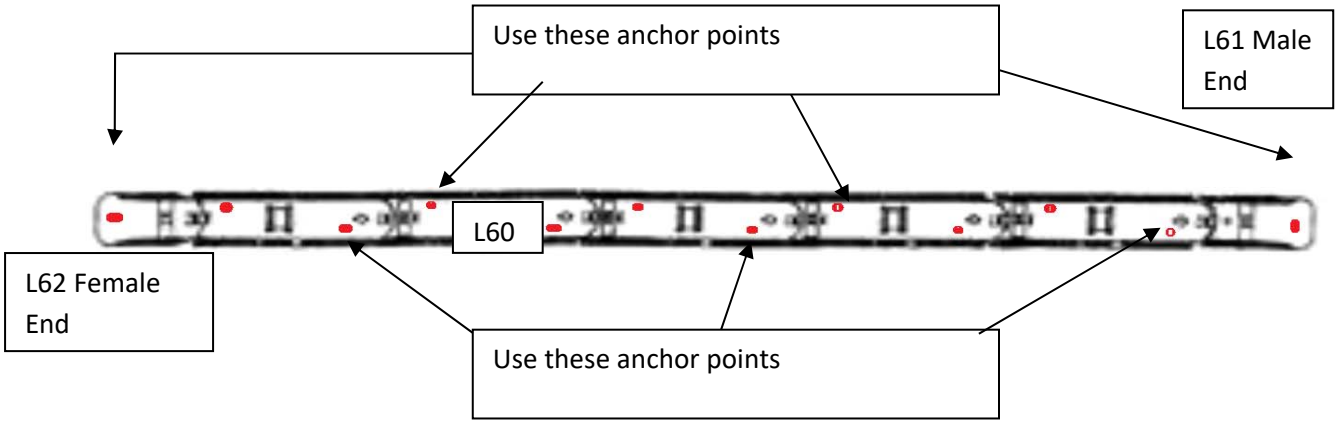

1. Drill holes to a minimum depth of 8". Place a mark on the drill bit 8" from the tip.
2. Using the rotary hammer with the 3/4" bit, insert the bit through the angled hole, and drill into the asphalt road. Do not drill straight down, but rather follow the same angle of the pre-drilled hole in the L60 SEPARATOR. When the marked point on the bit is flush with the L60 SEPARATOR, a depth adequate to accommodate the bolt and anchor, stop drilling.
3. Place a washer on a lag screw, and insert the lag screw into the plastic expansion anchor.
4. Use the small hammer to tap the bolt through the hole until it pushes the plastic expansion anchor through, and bottoms out under the pavement.
5. Use the impact wrench with a 15/16" socket to tighten the bolt until the washer is *snug* against the L60 SEPARATOR unit and the plastic expansion anchor widens beneath the road surface.

CAUTION: ***NEVER*** *install a bolt without the washer and anchor.*

HINT: Temperature extremes can cause the L60 SEPARATOR to contract and expand slightly even during the short installation time. Therefore, if you drill all of the holes at one time, you may discover that some of the holes in the L60 SEPARATOR no longer align with the holes you have drilled into the pavement. Ideally, a second installer installs the anchor bolt shortly after the first installer drills the hole

.

INSTALLING THE MARKERS/BOLLARDS

Consult the project specifications to determine the spacing of the markers/bollards along the length of the separator. Each L60 SEPARATOR unit can accept a maximum of one marker or bollard. This equates to a 3.35′ on center spacing of the markers. But often they are spaced further apart. Spacing of markers/bollards every other SEPARATOR unit equates to a 6.7′ on center spacing, and so on.

NOTE: The L84 Flat Marker/Bollard does not have a Stabilizing Bar.

The marker/bollard is best added after the L60 SEPARATOR is bolted into position on the roadway. The reboundable Flex Boot of the marker/bollard has a narrow edge and a tall edge. The narrow edge of the reboundable Flex Boot of the vertical marker/bollard fits into the center slot of the one-meter L60 SEPARATOR. Notice that there is a small wedge in the slot (Fig 6). It is easier to insert the reboundable Flex Boot in the side where the wedge is located, but inserting from either side is effective.

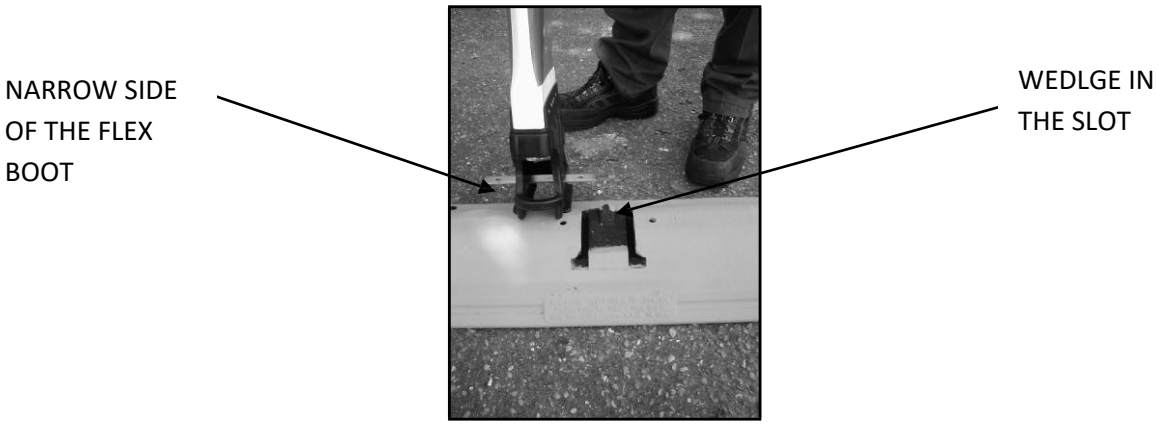

To add the markers/bollards:

1. Use soapy water to lubricate the bottom of the marker/bollard and the slide-in slots in the center of the one-meter L60 SEPARATOR. Do not use silicone or petroleum- based lubricants because residue may allow the markers/bollards to ease up from the L60 SEPARATOR and cause them to lean.

   Position the reboundable Flex Boot into the L60 SEPARATOR slot with the narrow edge facing toward the L60 SEPARATOR. Give it a gentle tap so that the marker/bollard stands on its own (Fig 7).

Fig 7

2. Continue to tap the base with a rubber hammer, while pulling, to help the marker/bollard slide into the slot. The reboundable Flex Boot has two sloping ends to assist sliding it into the L60 SEPARATOR (Fig 8).

3. The Stabilizing Bars (metal flanges) protruding from the sides of the reboundable Flex Boots are designed to rest tightly on top of the L60 SEPARATOR. Accordingly, do not be concerned if the Stabilizing Bars scrape the top of the L60 SEPARATOR during installation.

HELPFUL NOTE: If the Flex Boot resists sliding into the slot, insert a pry bar between the road and the L60 SEPARATOR unit beneath the slot and raise slightly while tapping the Flex Boot. Raising the L60 SEPARATOR unit at the slot will spread open the slot slightly to allow easer installation of the Flex Boot.

ALTERNATE METHOD: THE Q640 PANEL PULLER TOOL

For easiest installation, we recommend using the Q640 Panel Puller tool. Marker/bollard installation is faster and easier. Refer to **Appendix A** for a description and instructions.

SECURING THE MARKER/BOLLARD WITH THE S65 BLACK SECURING ARCS

There are two S65 black Securing Arcs for the Flex Boot of each marker/bollard. Each S65 black Securing Arc has two short hex head screws and one long hex head screw.

NOTE: This section does not apply to the L84 Flat Marker/Bollard. The L84 Flat Marker/Bollard does not require S65 black Securing Arcs.

IMPORTANT: You must install all 3 screws in each S65 black Securing Arc. Start with the longer 4″ screw that installs in the top hole of the S65 black Securing Arc. If you use the short screws first, the Securing Arc may not be tight enough on top.

The S65 black Securing Arcs serve two purposes: discourages theft and strengthens the reboundable Flex Boot connection.

Securing the Stabilizing Bars that protrude from the reboundable Flex Boot reduces the chance of the reboundable Flex Boot popping out of the L60 SEPARATOR's slot upon a severe vehicular impact on the marker/bollard.

To secure the markers/bollards:

4. Position the Stabilizing Bars so that their holes are above the pre-molded holes in the top of the L60 SEPARATOR (Fig 9). If necessary, use the rubber hammer to align the Stabilizing Bars with the pre molded holes.

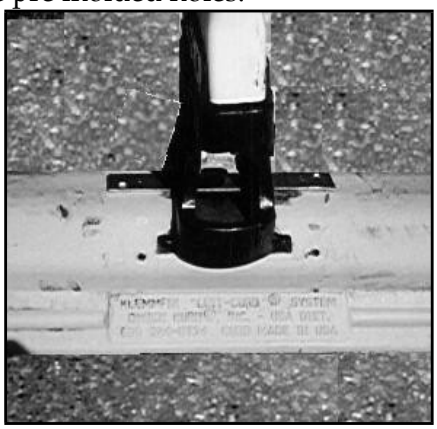

Fig 9

5. Place a black Securing Arc on the L60 SEPARATOR, snugly against one side of the marker/bollard's reboundable Flex Boot, aligning the hole with the hole in the Stabilizing Bar and the hole in the L60 SEPARATOR.

6. Place the long screw through the single top hole of the S65 black Securing Arc, and tighten securely.

IMPORTANT: The 4" hex screw must be installed first. For all screws, use 7/16" Six Point Socket to avoid stripping the hex heads. If using an electric drill, DO NOT EXCEED 800 RPM!

---

7. Place two short screws into the two side holes of the S65 black Securing Arc, and tighten securely.

8. Repeat the process with a second black Securing Arc on the other side of the reboundable Flex Boot (Fig 10). Continue the process of installing two S65 black Securing Arcs for each marker/bollard's reboundable Flex Boot.

The Black Securing Arc Requires All 3 Screws! The top Long Screw ALWAYS is installed FIRST!

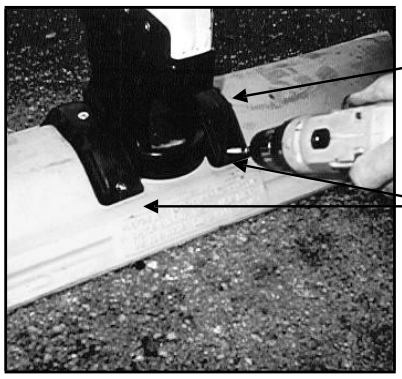

Fig 10

REMOVAL

Unlike asphalt or concrete curb, QWICK KURB® is *reusable*. It can be removed to make way for repaving, and then reinstalled inexpensively. Only the plastic expansion mollies and concrete anchor assemblies must be abandoned and replaced.

TRAFFIC CONSIDERATIONS

Whenever possible close both lanes of traffic when removing the L60 SEPARATOR. If one lane must be kept open during removal, take care to assure that all equipment and personnel are kept clear of the open travel lane. Use flaggers, law enforcement officers, flashing arrow boards, attenuators and other safety devices as necessary.

REMOVING THE MARKERS/BOLLARDS

1. Unscrew the S65 black Securing Arcs. Save the hardware and the S65 black Securing Arcs. Slide the markers/bollards out of the L60 SEPARATOR. Use a rubber hammer to tap the marker/bollard's reboundable Flex Boot.

NOTE: If you have adequate storage space, you may skip this step and leave the markers/bollards in the L60 SEPARATOR.

REMOVING THE L65 REFLECTIVE ARCS

We recommend leaving the L65 Reflective Arcs attached during storage.

DISASSEMBLING THE L60 SEPARATOR UNITS

2. Before removing the QWICK KURB® from the roadway, loosen the nuts connecting the L60 SEPARATOR units, using a 17 mm socket.

UNBOLTING FROM THE ROADWAY

3. Use the impact wrench with the 15/16" socket to back out each of the asphalt lag bolts. Save the undamaged bolts and washers for the next installation.

PICKING UP THE L60 SEPARATOR

Always start by picking up the L62 Female End unit.

4. Lift up the adjoining one-meter L60 SEPARATOR unit.

5. Continue lifting each remaining L60 SEPARATOR in reverse order, from which it was installed.

DO NOT DRAG THE L60 SEPARATOR UNITS

Sliding the L60 SEPARATOR a few inches to correct alignment is acceptable. However, under no circumstances are the L60 SEPARATOR units ever to be dragged along a hard surface such as a road. If the L60 SEPARATOR units are inadvertently installed in an incorrect location or must otherwise be relocated, you must take up the L60 SEPARATOR units as instructed in the **Removal** section on page 25, and re-install them in the new location. Alternatively, contact Valtir, LLC operations personnel for instructions.

Two critical components of the L60 SEPARATOR that can be damaged by dragging are the steel connecting hooks and the raised feet. Dragging a long line of L60 SEPARATOR units may bend the steel connecting hooks, endangering the connections.

Dragging may also wear down the raised feet, which is unacceptable. The raised feet raise the L60 SEPARATOR slightly above the roadway surface to allow water run-off that is not handled by water channels.

MAINTENANCE

Inspect the system periodically. Usually the reboundable Flex Boot will not be damaged even if the marker/bollard is. An undamaged reboundable Flex Boot may be used again by removing the damaged part from the Flex Boot, and bolting a new marker/bollard top part to the Flex Boot. Refer to **Appendix B** on page 34 for instructions on how to replace the tops.

* The L60 SEPARATOR, L61 Male End, and L62 Female End are coated with a special stain resistant material. It will last several years under normal road conditions. Over time, dirt and other debris may accumulate around the curb. Pressure wash or brush away accumulations of such material for optimum visibility.

Contact Valtir, LLC for a quote to refurbish L60 SEPARATOR units.

If water backs up against the L60 SEPARATOR and better drainage is needed, use L61 Male and L62 Female End units to create additional water channels. At each affected position, simply replace a one-meter L60 SEPARATOR by facing the downslopes of opposing L61 Male and L62 Female End units toward one another, and separating them by several inches.

On rare occasions, the underlying road base is composed of unstable material, which may cause the anchor bolts to loosen. Consider re-tightening if the anchoring system has held successfully for a long time; or consider replacing the anchor with a wider version. You may also re-position the anchors by re-drilling the SEPARATOR in a different position.

Please contact Valtir, LLC for specific instructions.

STORAGE

To retain QWICK KURB®'s yellow or white color and the optimum reflectivity of the markers/bollards and L65 Reflective Arcs after each use, the units should be pressure washed before storage. The yellow and white L60 SEPARATOR units may be stored outside, off the ground, and covered with a tarp. Stack the one-meter units in a doubled crosshatch pattern. Stack a base row of four (4) one-meter L60 SEPARATOR units on the bottom parallel to one another, and nest three (3) L60 SEPARATOR units upside-down in the cavities between the base row L60 SEPARATOR units. Next, create another base of four (4) parallel L60 SEPARATOR units, perpendicular to the direction of the lower base, and again nest three (3) L60 SEPARATOR units upside-down. Continue in this pattern up to a maximum of sixty-three (63) L60 SEPARATOR units, i.e., nine rows of seven L60 SEPARATOR units (Fig 11).

Do not stack randomly, or leave parts of the sections unsupported. Proper stacking will keep the L60 SEPARATOR from warping or breaking. Do not stack higher than approximately four (4) feet unless there is support on all sides. Do not double stack pallets. Regularly inspect stacked L60 SEPARATOR units to insure that there is no leaning. Shrink-wrap and band when possible.

We recommend that the L 65 Reflective Arcs, S65 black Securing Arcs, and markers/bollards be stored under cover, because long exposure to sunlight and moisture degrades reflective sheeting and these plastics.

NOTE: You may leave the L65 Reflective Arcs attached.

Care must be taken to insure that units are cross-stacked as directed, and tied down securely and not so high that they fall if jarred; otherwise personal injury and damage may result. Pallets must be strong enough to support the combined weight, and be located on a solid foundation to avoid leaning.

STACK OF 63 L60 SEPARATORS

Fig 11

TRANSPORT

The recommended manner of transport is on flatbed trucks or heavy-duty trailers. QWICK KURB® is heavy; a one-meter L60 SEPARATOR weighs approximately 34 lbs. Care must be taken to insure that units are secured and not stacked so high that they fall during movement, or personal injury and damage may result. Pallets must be strong enough to support the combined weight. Do not double stack pallets. Transport requires banding or other support suitable for the mode of transportation. Stack units on pallets for transport in the same pattern described in the **Storage** section on page 28. Pack nuts and washers into a transport safe container.

Markers/bollards should be boxed for transport. Stack the markers/bollards vertical, or lay them horizontally on the thin edge side by side. Either way, you should place them at opposite ends of each other to optimize packing space, and prevent the Stabilizing Bars or reboundable Flex Boots from scraping the sheeting. In addition, it is best to place cardboard or paper between stacks/rows to prevent damage to sheeting. Pack S65 black Securing Arcs, and hardware in transport safe containers. If L65 Reflective arcs are detached, pack them in transport safe containers as well.

CUSTOMER SERVICE

For advice or help, call Valtir, LLC Customer Service at 813-645-5072 between 8:00 AM and 5:00 PM Central Time Zone, Monday-Friday.

REPLACEMENT PARTS

Recommended spare parts include **per 1,000 feet** of QWICK KURB®: (1) Reflective Arc; (5) marker/bollard tops.

Replacement parts may be ordered from your local distributor. Contact Valtir, LLC at 15601 Dallas Parkway, Suite 525, Addison, Texas 75001 for more information on local distributors.

MEASUREMENTS

All measurements in these instructions are approximate as recycled plastic varies in weight, and expands and contracts slightly with temperature variation. The L60 SEPARATOR often referred to above as being “one-meter”, is actually slightly longer at about 3.34 feet or 40 1/8” long. The L61 Male End unit is 1.46 FT or 17 1/2” long. The L62 Female End unit is 1.55 FT or 18 5/8” long.

APPENDIX A - Q640 PANEL PULLER

QWICK INSTALLATION

The reboundable Flex Boot of the marker/bollard has a short edge and a tall edge. The short edge of the reboundable Flex Boot of the vertical marker/bollard fits into the center slot of the one-meter L60 SEPARATOR. Notice that there is a small wedge in the slot (Fig 1). It is easier to draw the reboundable Flex Boot from the opposite side of where this wedge is located, but drawing from either side is effective. Your Panel Puller will grip the horizontal band on the short edge.

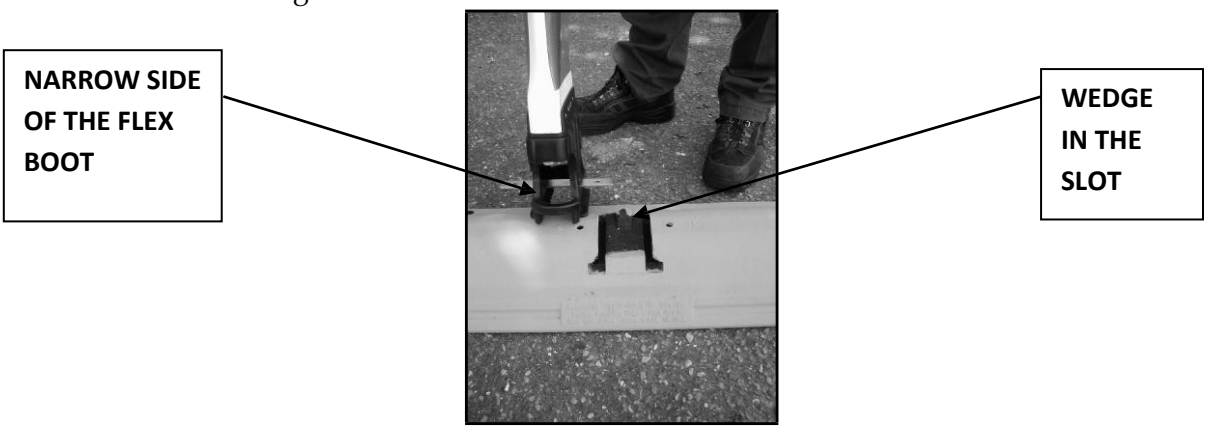

Fig 1

To use the Q640 Panel Puller:

TIP: Dip the reboundable Flex Boot into soapy water to start. (See page 21)

1. Position the reboundable Flex Boot into the L60 SEPARATOR slot with the short edge facing toward the L60 SEPARATOR. Align the reboundable Flex Boot into the slot, and start it with a gentle kick or hammer tap so that the marker/bollard stands on its own.

2. Tilt the Panel Puller toward the reboundable Flex Boot and use the steel hook to grab the horizontal edge of the boot (Fig 2). If the metal flanges of the Stabilizing Bar scrape the top of the L60 SEPARATOR, you may have to tap them with a hammer while pulling. Position the holes of the metal flanges to align with the small holes in the top of the L60 SEPARATOR.

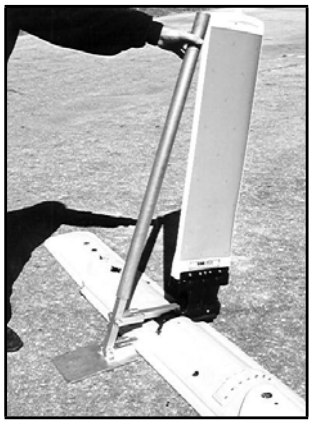

Fig 2

3. Bring the base plate of Panel Puller toward yourself so that it sets flat on the roadway surface, flush against the L60 SEPARATOR (Fig 3).

Fig 3

4. Use the long Panel Puller handle to pull the reboundable Flex Boot through the L60 SEPARATOR. If the reboundable Flex Boot misaligns as it moves through the L60 SEPARATOR, maneuver the Panel Puller to the left or right to make adjustments (Fig 4). Remember the soapy water if you have difficulty.

Fig 4

APPENDIX B - Installing New Markers/bollards to the Reboundable Flex boot

TRAFFIC CONSIDERATIONS

Whenever possible close both adjoining lanes to traffic when replacing markers/bollards on the road. If one lane must be kept open, take care to assure that all equipment and personnel are kept clear of the open travel lane. Observe all traffic control regulations. Use flaggers, law enforcement officers, flashing arrow boards, attenuators and other safety devices as necessary for the conditions present.

REMOVING THE OLD MARKER/BOLLARD TOP FROM THE REBOUNDABLE FLEX BOOT

1. With the old marker/bollard top and reboundable Flex Boot still attached to the L60 SEPARATOR, step on the side of the old marker/bollard to bend it down to the pavement so that you can access the bottom of reboundable Flex Boot.

2. Remove the nuts and washers that attach the old marker/bollard top to the reboundable Flex Boot.

3. Pull up on the old marker/bollard top to detach it from the reboundable Flex Boot

PREPARING THE NEW MARKER/BOLLARD FOR INSTALLATION ON THE REBOUNDABLE FLEX BOOT

1. Remove nuts and washers from the new marker/bollard top.

CAUTION: Be careful that bolts do not slip up into marker/bollard or they will be lost. Keep the bolts pointed down at all times, but do not rest the bolts on a hard surface.

---

2. Pull firmly on the bolt to assure that proper amount of threads are visible. Twist the bolt head if necessary to properly seat it in its plastic holder.

3. Apply a lubricant such as soapy water to the plastic teeth so that they can pass through the slot in the top-center of the reboundable Flex Boot.

4. Install the bolts of the new marker/bollard top into the holes on the Reboundable Flex Boot, again being careful not to allow the bolts to slide up into the marker/bollard where they would be lost. At this point, the teeth, even with lubrication, will probably not go into the reboundable Flex Boot. Thus, the bolts will not protrude fully through the holes at this stage.

5. Tilt the new marker/bollard top edgeways so that you can force one bolt through one of the holes sufficiently enough to install the washer and thread the nut several turns.

6. Tilt the new marker/bollard top to the other side, so that you can force the other bolt through its hole, and install the washer and thread the nut several turns.

7. Tighten both nuts firmly.

8. Firmly press down on the new marker/bollard top to *pop* the teeth through the slots in the reboundable Flex Boot.

9. Bend the new fully assembled marker/bollard back and forth to test that the teeth have passed through the reboundable Flex Boot.

APPENDIX C – PARTS SPECIFICATIONS

L60 SEPARATOR UNIT

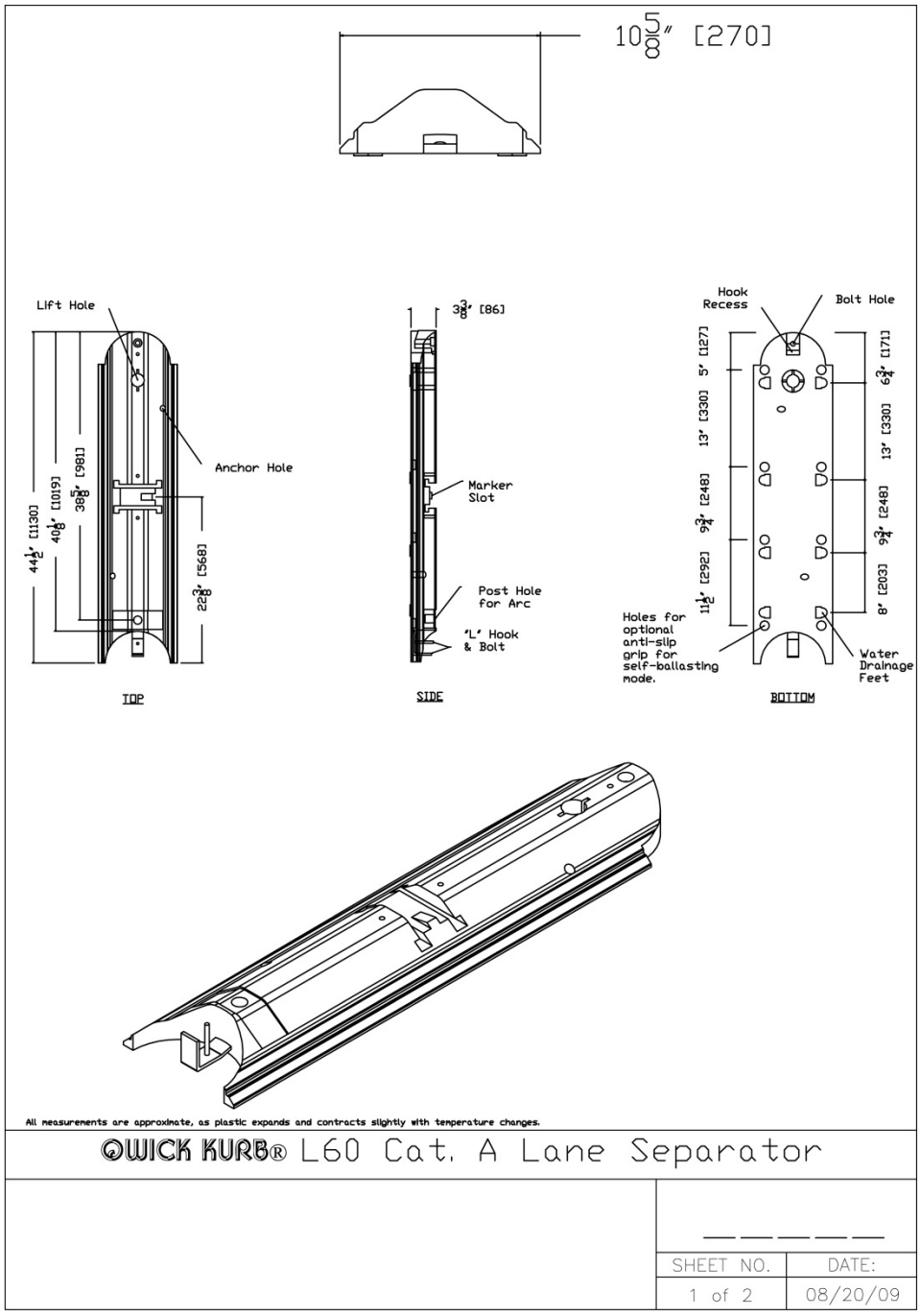

L61 MALE END UNIT

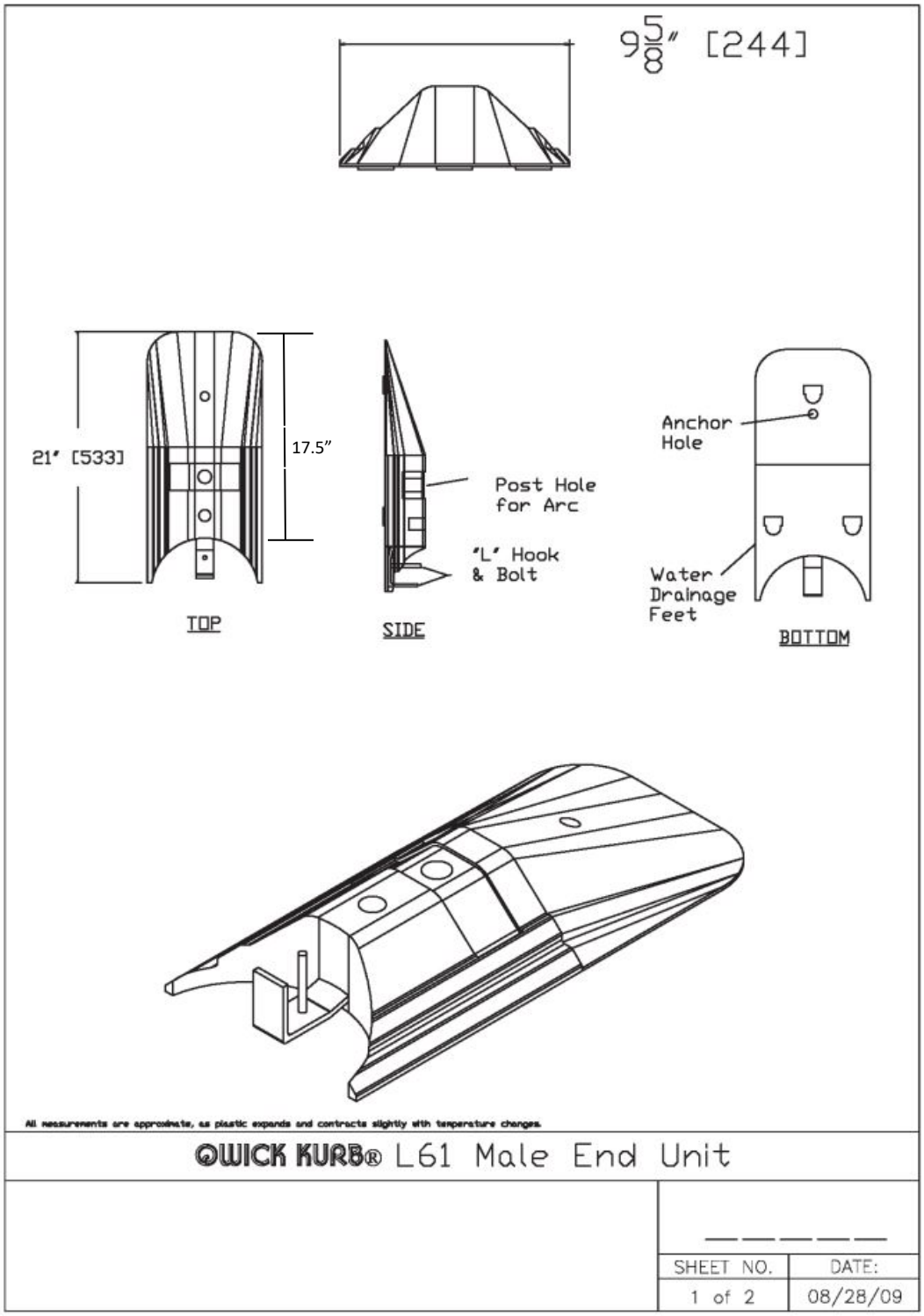

L62 FEMALE END UNIT

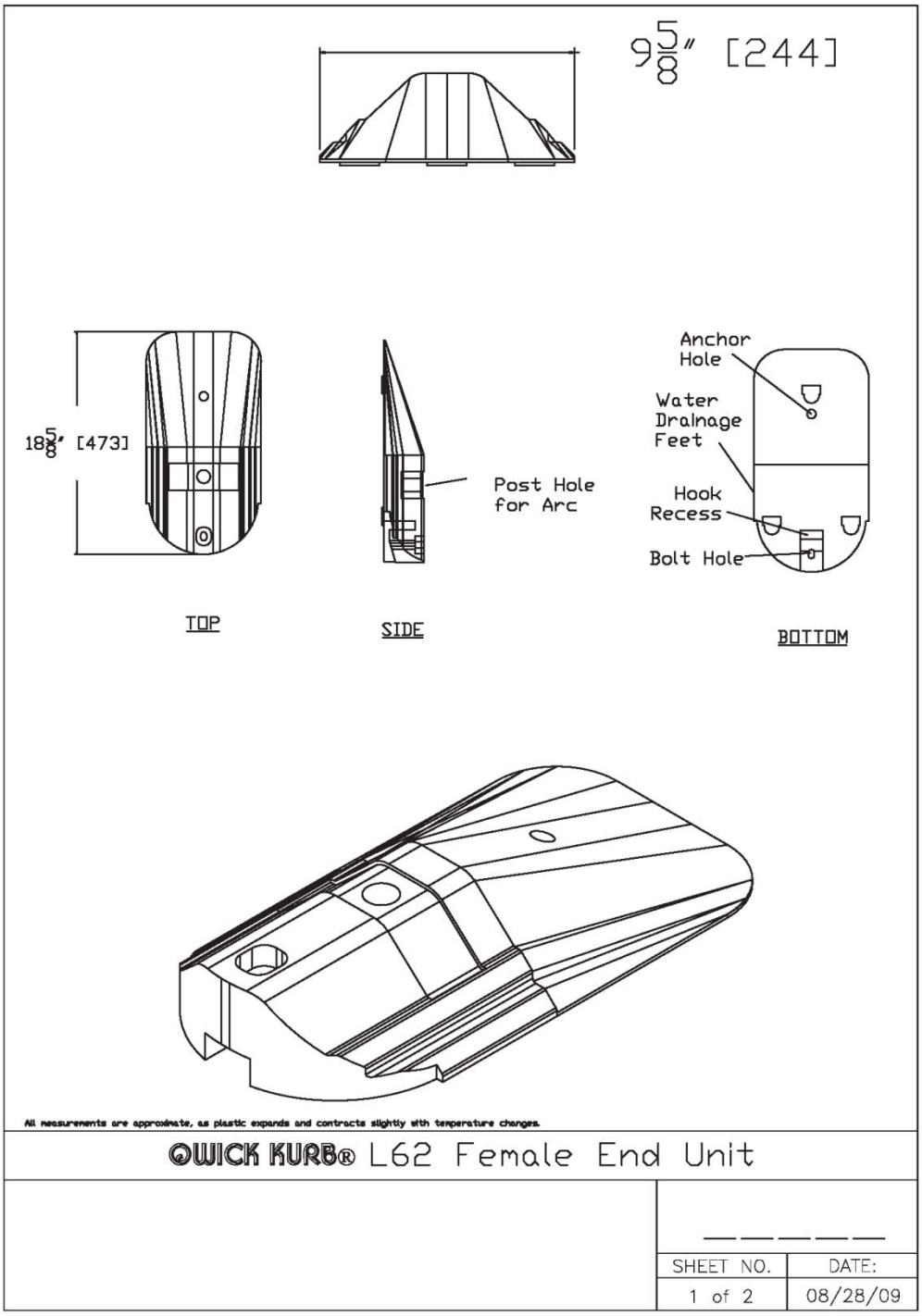

L65 REFLECTIVE ARC

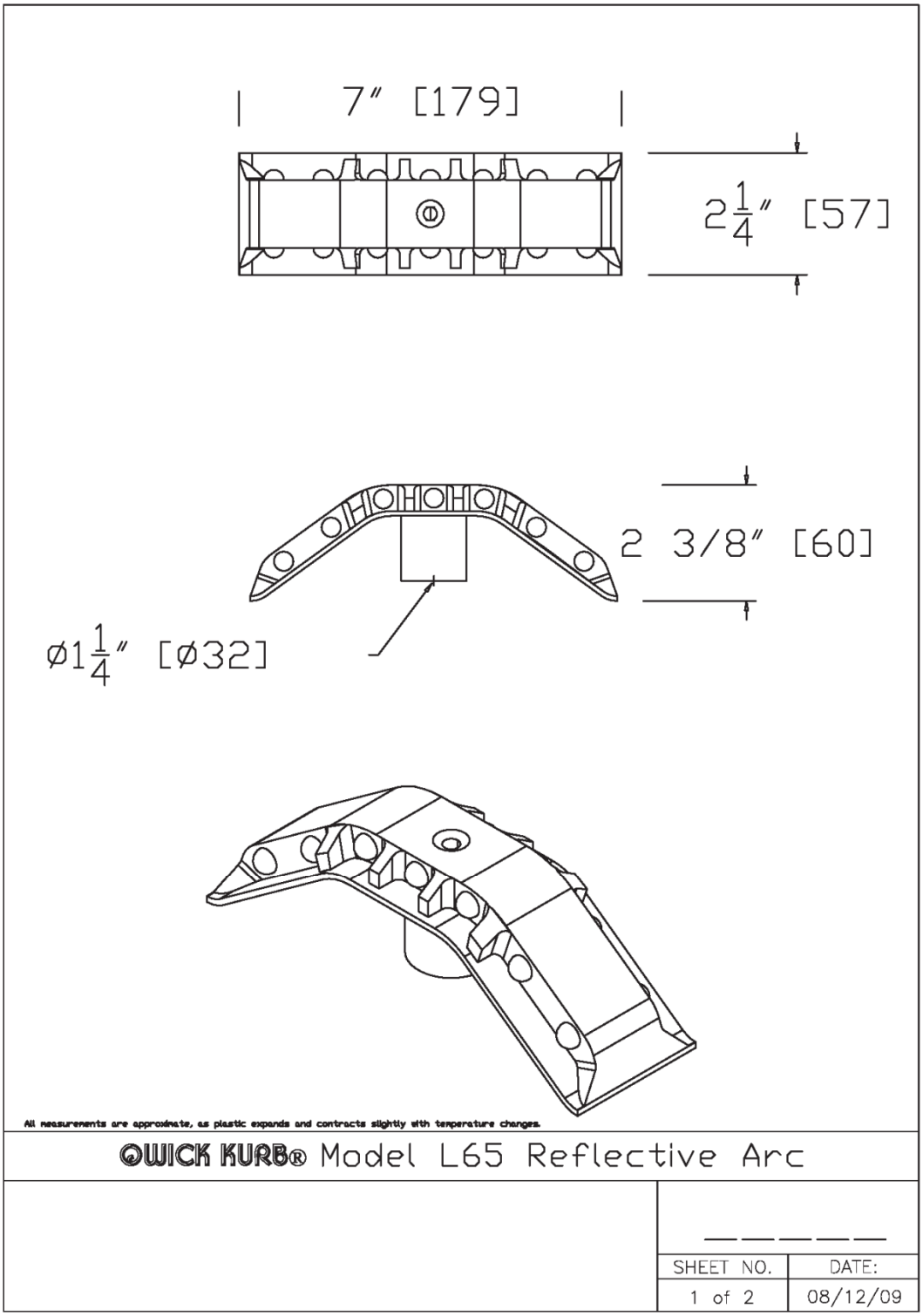

S65 SECURING ARC

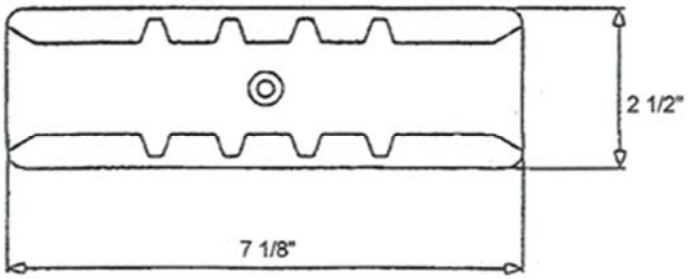

Rev.	Description	Date	Initials
0	Initial Drawing	4/2/04	MS
1			
2			
3			
4			
5			

*Note: All measurements are approximate as plastic expands and contracts slightly with temperature change.

Model Number: S 65	**Scale** Not To Scale
Name: Securing Arc	**Overall Dimensions:** Length: 7 1/8" Width: 2 1/2" Height: 2 3/8"
System: Lane Separator	**Weight:** 1/3 pound
	Sheeting: none
	Color: Black **Materials:** Plastic

QWICK KURB®, INC.

Sheet 1 of 1

L84 FLAT MARKER

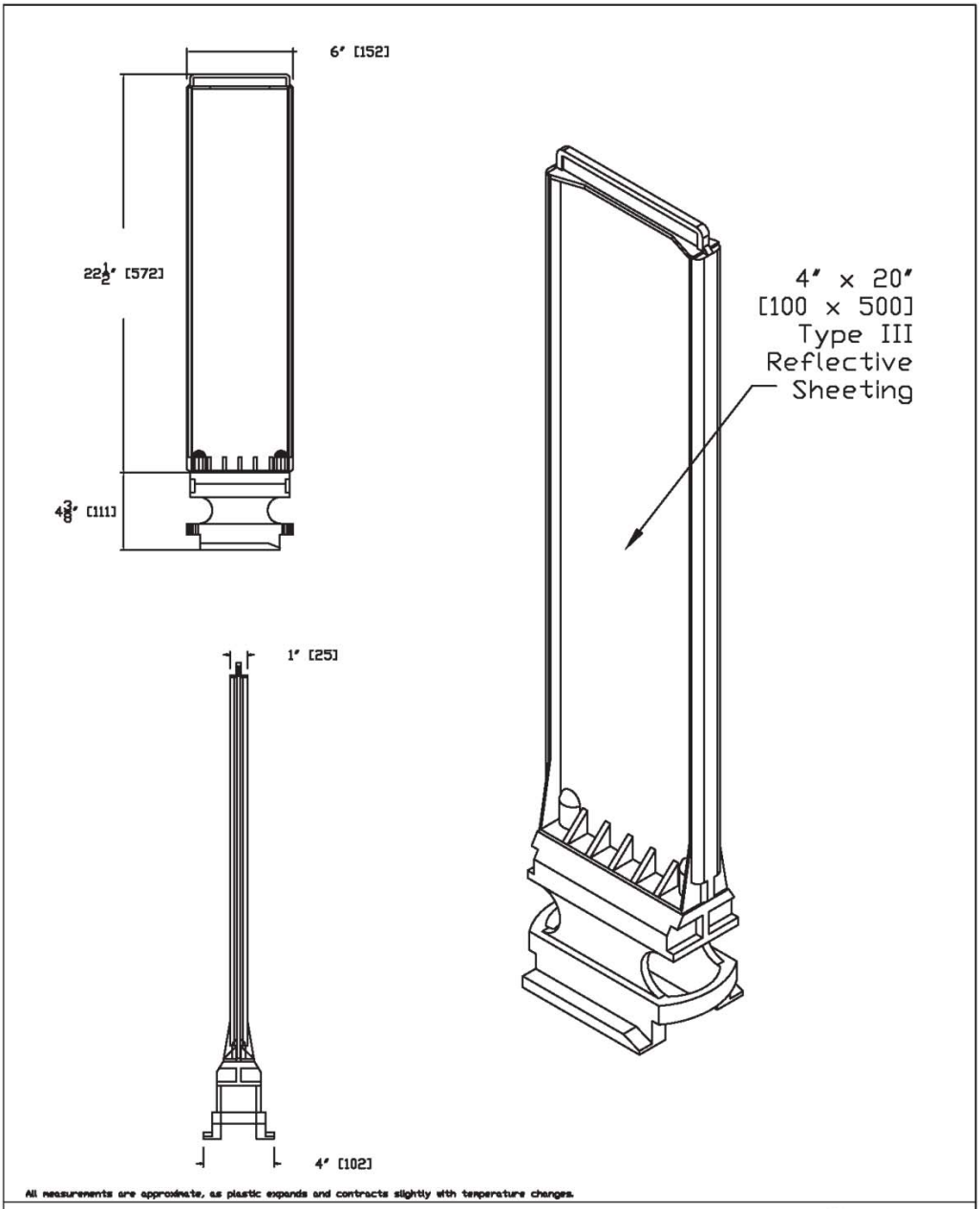

L104 MEGA

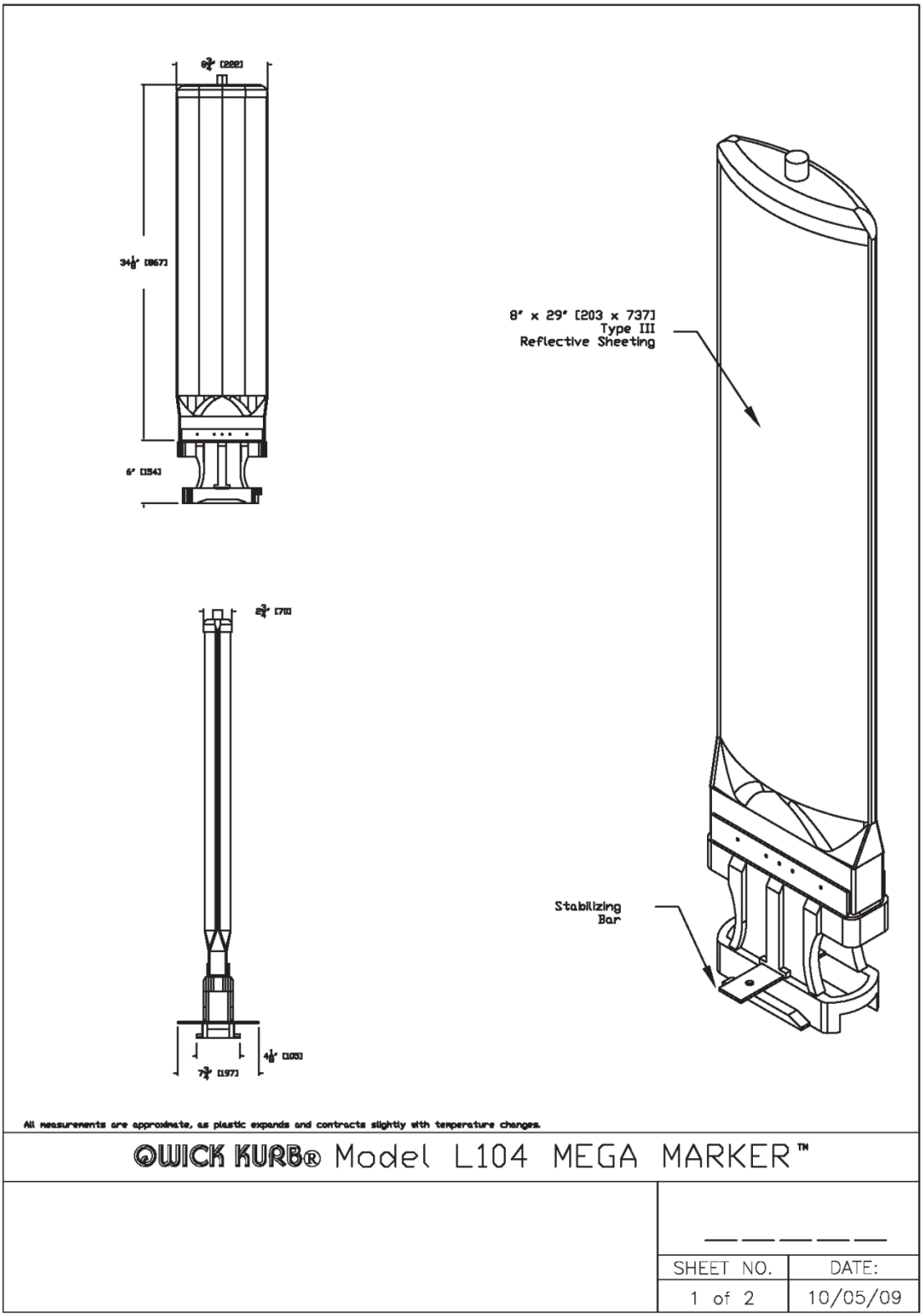
8" [203]
34 1/8" [867]
6" [154]
2 3/4" [70]
7 3/4" [197]
4 1/8" [105]
8" x 29" [203 x 737]
Type III
Reflective Sheeting
Stabilizing
Bar
All measurements are approximate, as plastic expands and contracts slightly with temperature changes.
QWICK KURB® Model L104 MEGA MARKER™
SHEET NO.
DATE:
1 of 2
10/05/09

L125 BIG BOLLARD®

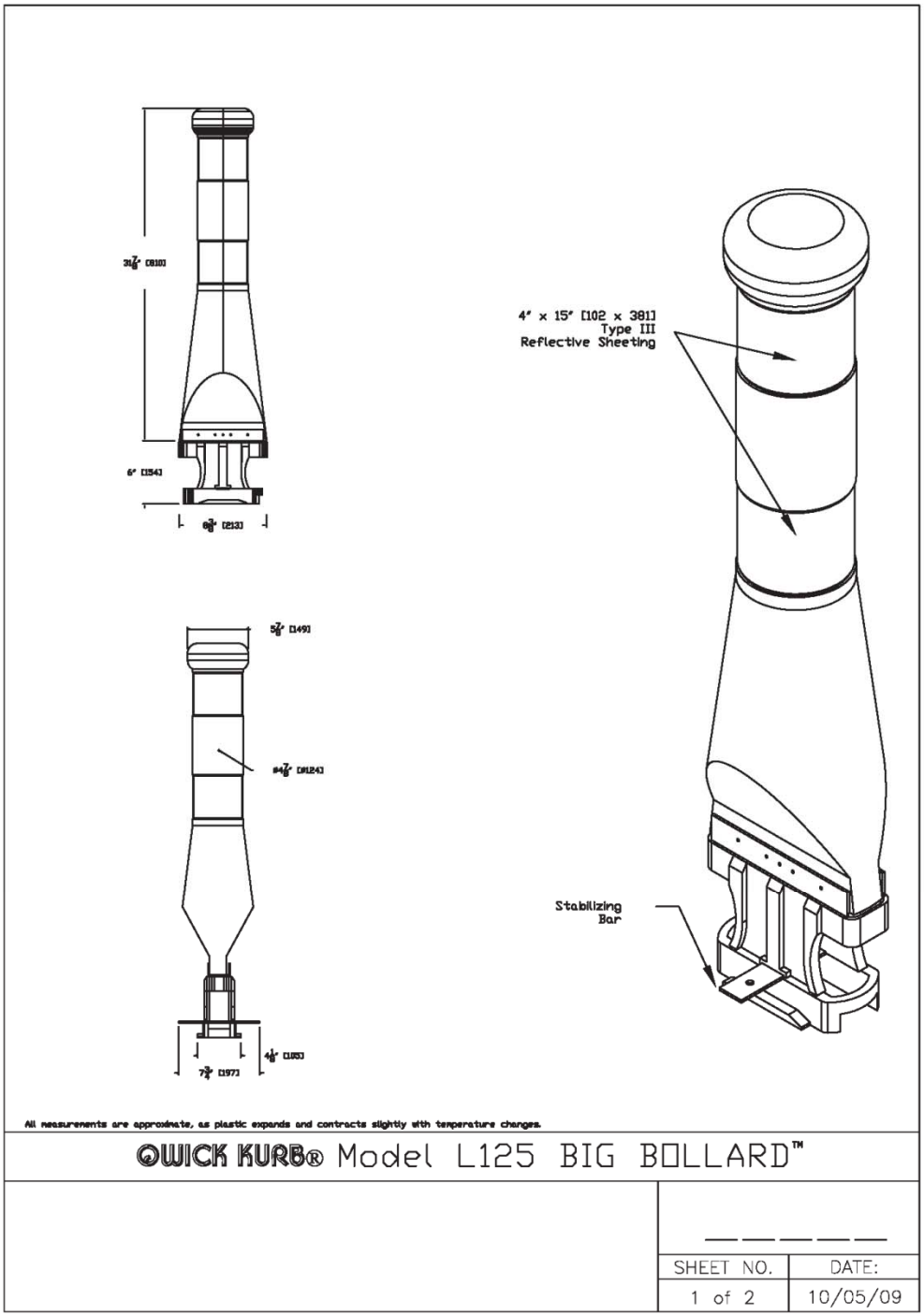

L125SH SHORT BIG BOLLARD ®

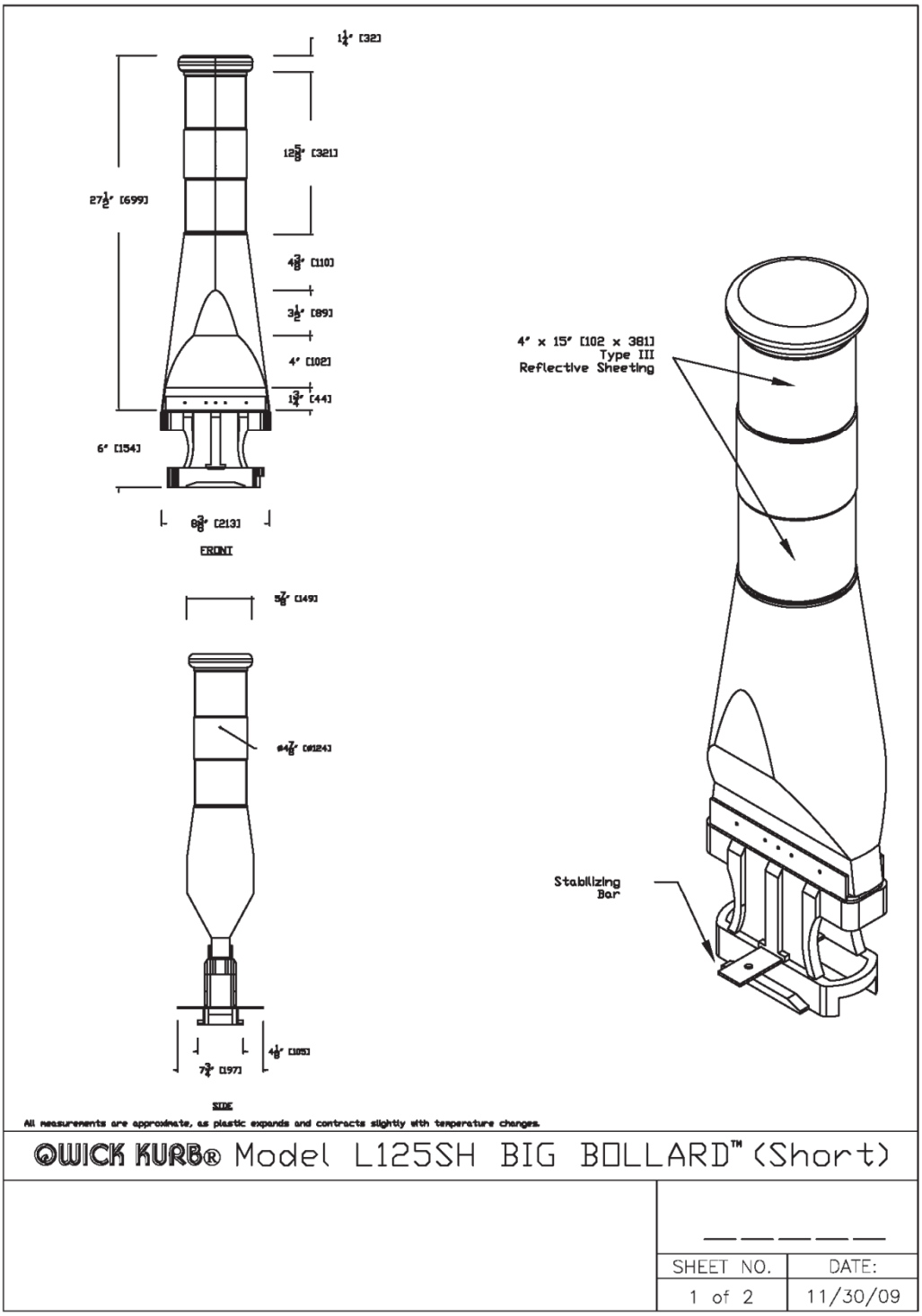

FS50 ASPHALT ANCHORING SET

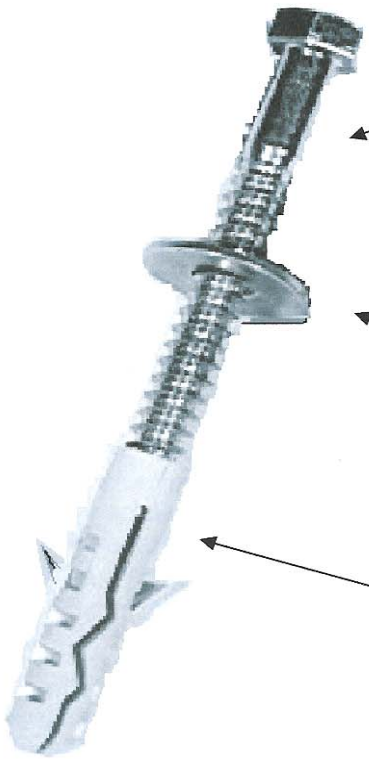

Rev.	Description	Date	Initials
0	Initial Drawing	9/16/02	MGS
1			
2			
3			
4			
5			

Model Number: FS 50

Name: Anchoring Hardware for Conventional Roadbase

System: Lane Separator

Scale Not To Scale

Overall Dimensions:

Length: N/A **Width:** N/A **Height:** N/A

Weight: 3/4 pounds

Materials: Zinc Plated

Color: N/A

**Note: FS50 anchoring hardware should be used where the Molly expands in road base beneath asphalt.*

QUICK KURB®, INC.

Sheet 1 of 1

APPENDIX D: SUPPLIMENTAL INFORMATION FOR STEEL GRATED BRIDGE DECK INSTALLATION

Refer to the "TEMPORARY INSTALLATION MANUAL" for the tools and other equipment that will be needed. After thoroughly reviewing the installation procedure, refine your installation procedure to take account of the following supplemental directions.

For installation on the Draw Bridge you will need no additional equipment except as is included with the purchase following:

"J" Hook Assemblies

The number of **"J" Hook Assemblies** you need for the Separators being placed on the Draw Bridge Deck. The final "J" Hook Assembly is depicted below. The Assembly comes to you with the "J" Hook, the 4" square metal plate, a washer and the nut already attached. You will be assembling the two "U" brackets in a crossing pattern, the washer and the lock nut on site.

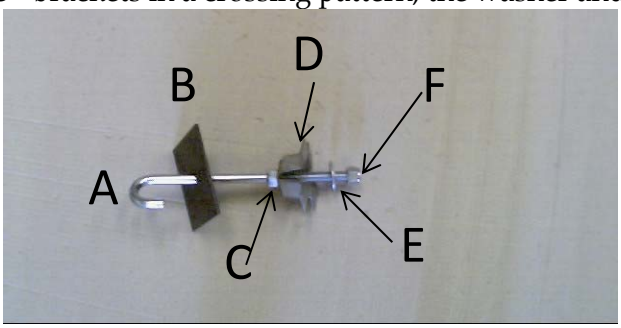

A "J" Bolt
B 4" Square Metal Plate
C Nut
D "U" Brackets (2 of them)
E Washer
F Nut

Installation Procedure using "J" Hooks

Be certain that the Separators and the Markers/Bollards will not be positioned where they might interfere with the operation of the Draw Bridge.

Before positioning the Separator on the bridge become familiar with the positioning methods described in "Instructions for Temporary Installation Manual." In addition notice the Large Pre-molded Hole in the top of the Separator. That hole is the location for the "J" Hook Assembly

LARGE PREMOLDED HOLE

The End Units are not fastened to the bridge deck, but all of the Separators are fastened to the bridge deck with the "J" Hook Assembly.

Initially, begin with the Male End Unit at the top of the draw bridge, and set out all of the Separators parallel to and about one foot away from the intended location. The reason for this is that you will have to partially install a "J" Bolt Assembly to the bridge grate by estimating the location of the large pre-molded hole. The last unit to be placed is a Female End Unit.

Do not bolt the Separators together at this time

Beginning with the Separator that is connected to the Male End Unit, use the position of the Large Pre-Molded Hole to determine where in the Bridge Deck you will want to place the "J" Hook Assembly. Insert the pre-assembled "J" Hook, 4" square metal brace and nut through the bridge deck. The brace will prevent the "J" Hook Assembly from falling through the deck. Turn the "J" Hook and pull upward so that the "J" grabs the deck grating, and tighten the nut securely to fix the "J" Hook Assembly to the deck.

Place the Male End Unit into position. Place the adjoining Separator on to the hook of the Male End Unit and also over the "J" Hook Assembly so that the top of the "J" Hook protrudes upward through the Large Pre-Molded Hole. Insert the two "U" brackets on to the "J" Hook in a crossing pattern, followed by the washer and the locknut. Tighten the nut enough to force the washer into the "U" Bracket cavity so that the tops of the "U" Brackets are slightly imbedded into the top of the Separator.

Complete the connection of the Separator to the Male End Unit by tightening a lock nut as described in the "INSTRUCTIONS FOR TEMPORARY INSTALLATION MANUAL."

Repeat the "J" Hook Assembly process for the next Separator, being sure also to attach the two adjoining Separators to one another afterward as described in the "TEMPORARY INSTALLATION MANUAL". Continue for the remaining Separator units. At the end, attach the Female End Unit to the last Separator.

On occasion you may come to a grate that presents an obstacle to the "J" Hook Assembly. When this occurs you may have to slightly misalign the Separator so that the otherwise straight line wobbles a bit. Verify with the bridge owner's representative that the slightly misaligned Separator line is acceptable to traffic.

Finally, inspect all "J" Hook Assembly nuts and connecting nuts to be certain that all are tight.

ADDING THE ARCS AND MARKERS/BOLLARDS

Install the reflective arcs and markers/bollards as described in the "INSTRUCTIONS FOR TEMPORARY INSTALLATION MANUAL. To save time you may wish to install these concurrent with the other operations mentioned above.

COUNTER WEIGHTS ON BRIDGE

Take into consideration the weight of QWICK KURB® on any draw bridge installation. On average QWICK KURB® weighs about 11½ lbs. per lineal foot.

TESTING

After final installation arrange to have the bridge raised, and watch QWICK KURB® for movement. Be certain that no personnel or property are below the bridge during this operation. When the bridge has returned to its down position, visually inspect each Separator to be certain that all are still secure. Re-secure any that are not correct.